GREMAC

eZero Drumscreen
Series: D856

Parts Catalogue

GREMAC

version: 1.0 - 2022-08

D856.A10

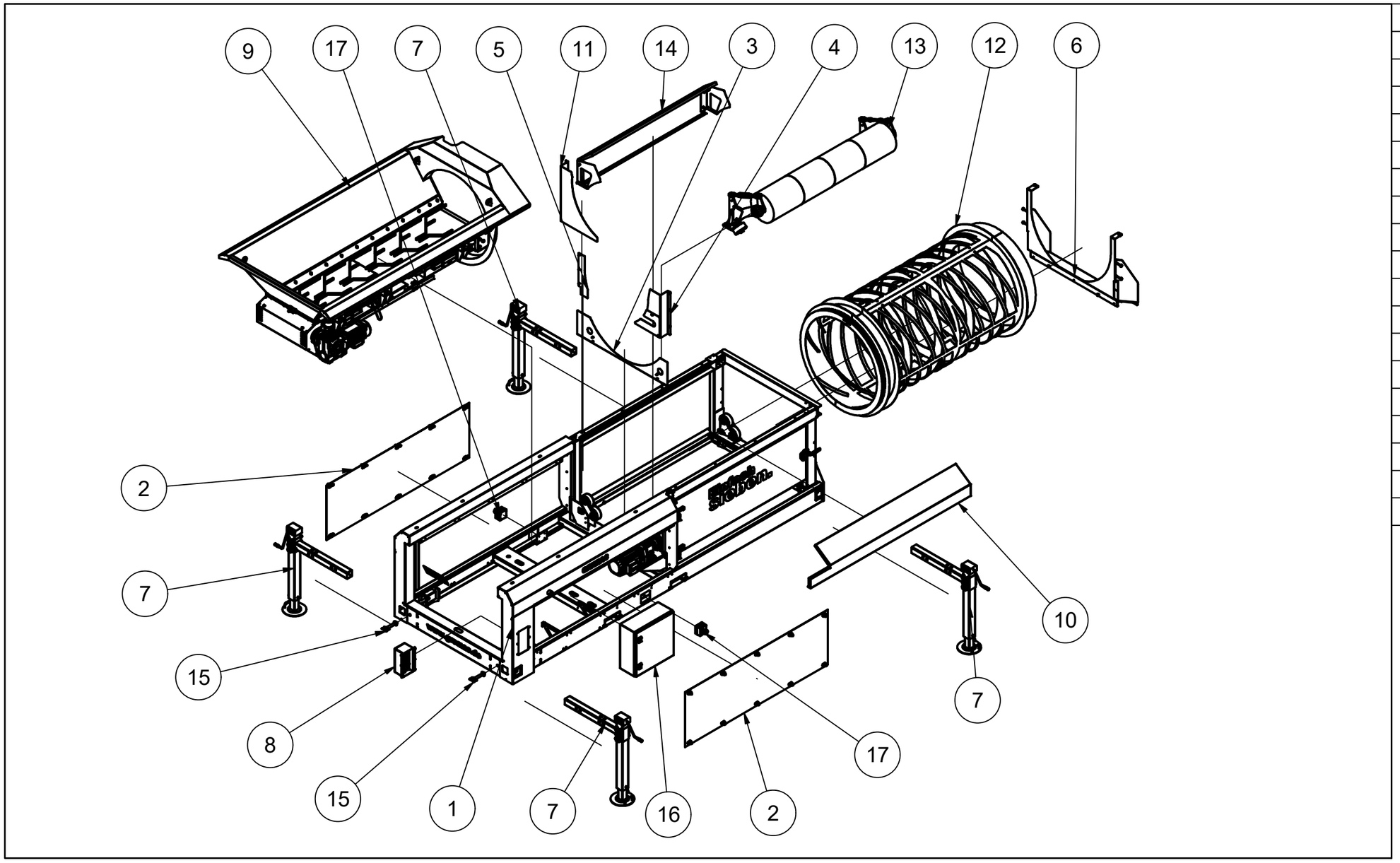

PARTLIST	
ITEM	Part Number
1	D856.B10
2	D856.G86
3	D856.L06
4	D856.L08
5	D856.L10
6	D856.L15
7	D856.L22 [D]
8	D856.L26
9	D858.E07
10	D858.M05
11	D858.M09
12	D860.D20
13	D860.L41
14	D860.M06
15	B119.A9982
16	B400.A9999
17	B406.A9956

[A] Critical part
[B] Preventive maintenance
[C] Wear parts
[D] useful to have on hand

GREMAC

version: 1.0 - 2022-08

D856.B10

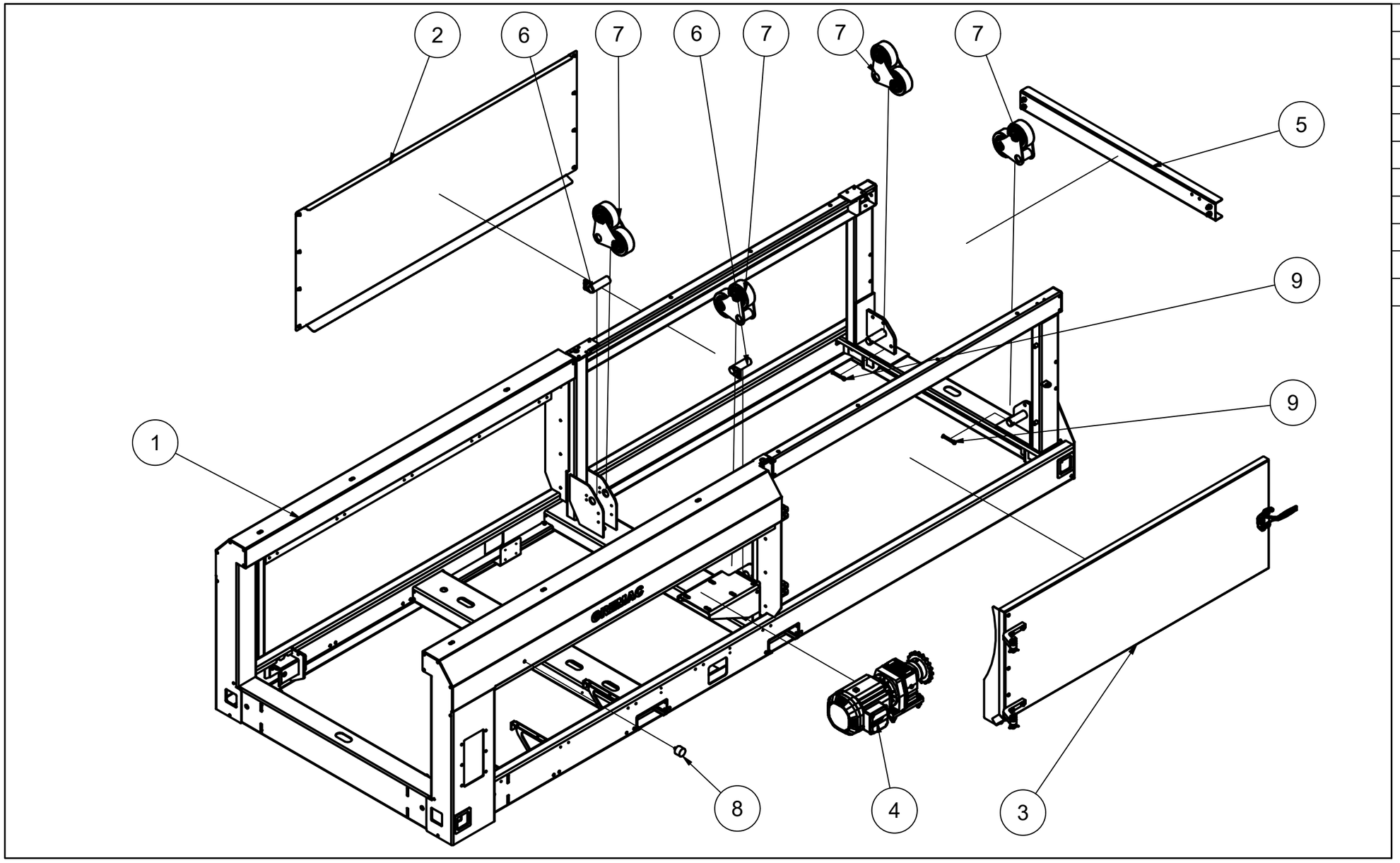

PARTLIST	
ITEM	Part Number
1	D856.C20
2	D856.L52
3	D856.L60
4	D858.D40
5	D858.L26
6	D858.L38
7	D860.D80
8	B118.A0011
9	B104.A0224

[A] Critical part
[B] Preventive maintenance
[C] Wear parts
[D] useful to have on hand

GREMAC

version: 1.0 - 2022-08

D856.L52

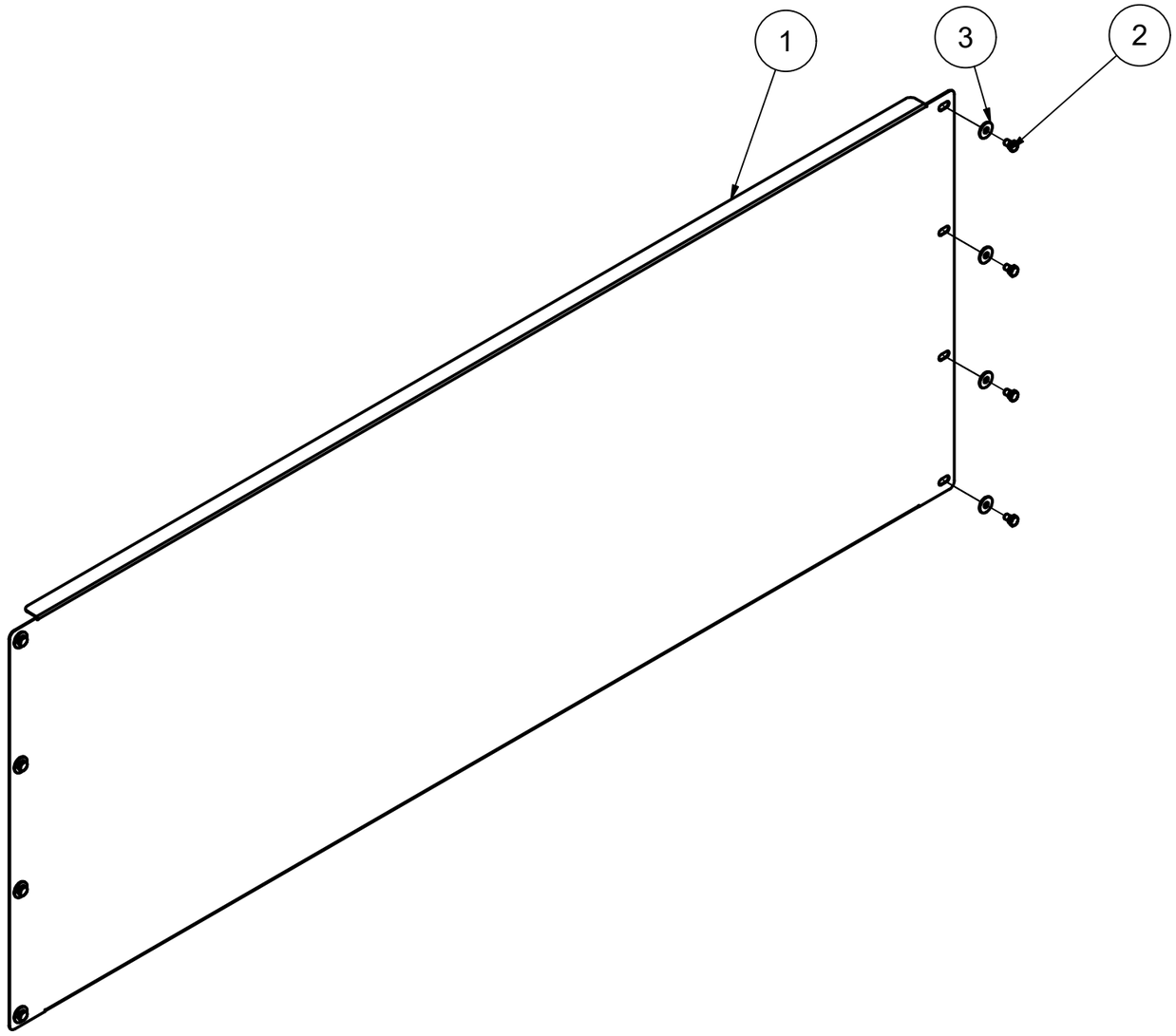

PARTLIST	
ITEM	Part Number
1	D856.L52.01
2	B100.A0647
3	B102.A0028

[A] Critical part
[B] Preventive maintenance
[C] Wear parts
[D] useful to have on hand

GREMAC

version: 1.0 - 2022-08

D856.L60

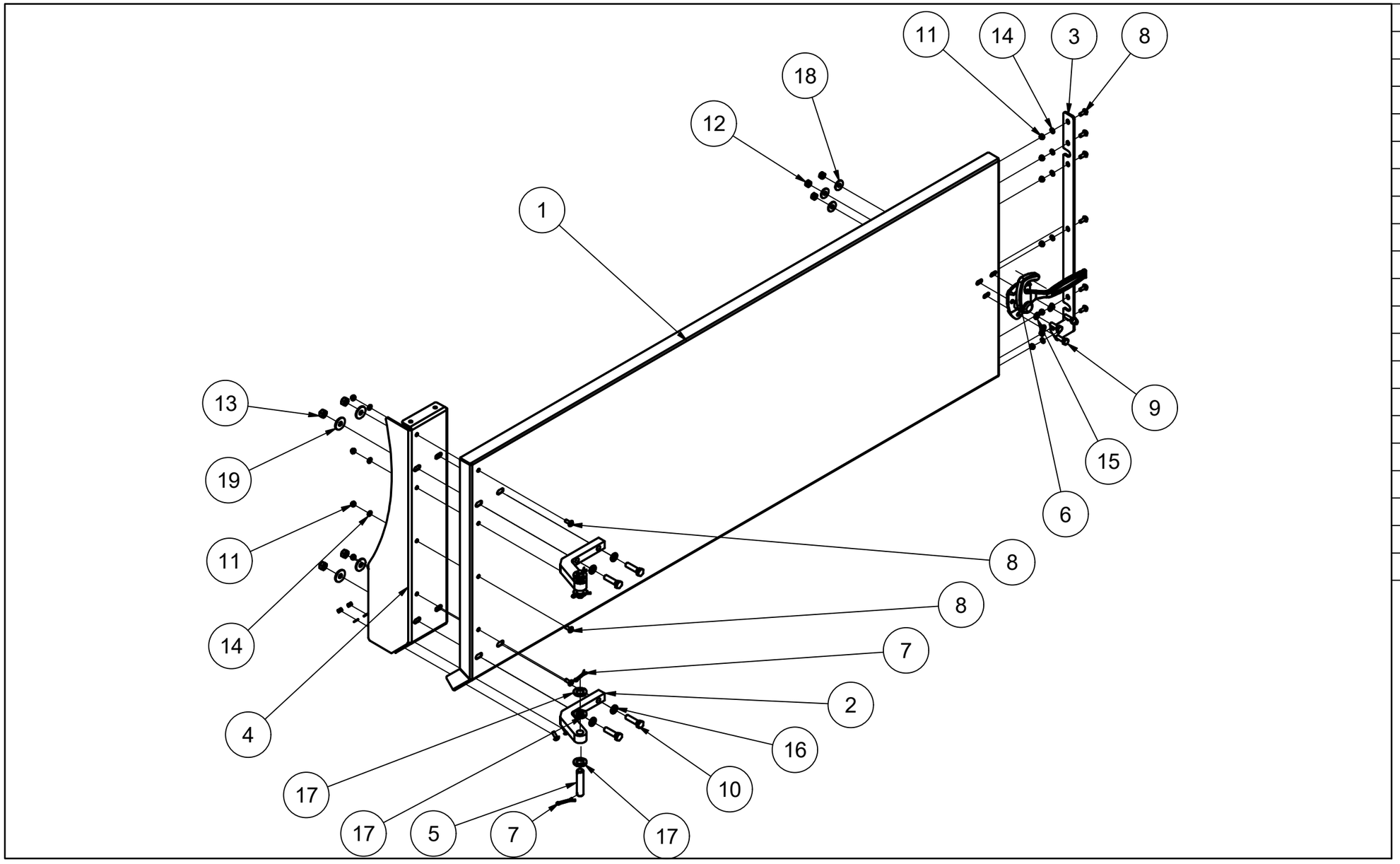

PARTLIST	
ITEM	Part Number
1	D856.L60.01
2	D858.G20.27
3	D856.L60.02
4	D856.L60.07
5	C000.M15.66
6	B907.A0055
7	B104.A0222
8	B100.A0961
9	B100.A0653
10	B100.A0683
11	B101.A0024
12	B101.A0025
13	B101.A0026
14	B102.A0001
15	B102.A0002
16	B102.A0003
17	B102.A0012
18	B102.A0028
19	B102.A0040

[A] Critical part
[B] Preventive maintenance
[C] Wear parts
[D] useful to have on hand

GREMAC

version: 1.0 - 2022-08

D858.D40

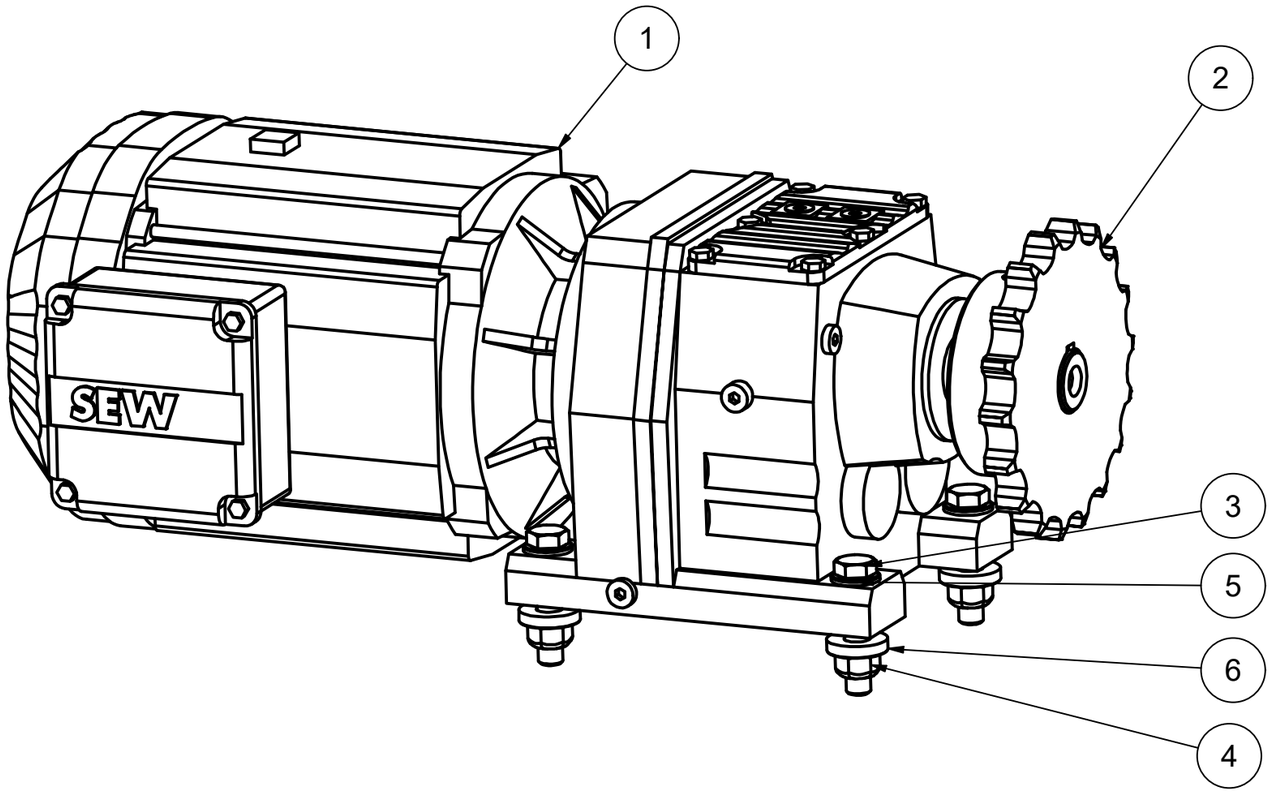

PARTLIST	
ITEM	Part Number
1	B500.A9983
2	B507.A0051 [A, B, C]
3	B100.A0107
4	B101.A0027
5	B102.A0004
6	B102.A0034

[A] Critical part
[B] Preventive maintenance
[C] Wear parts
[D] useful to have on hand

GREMAC

version: 1.0 - 2022-08

D858.L26

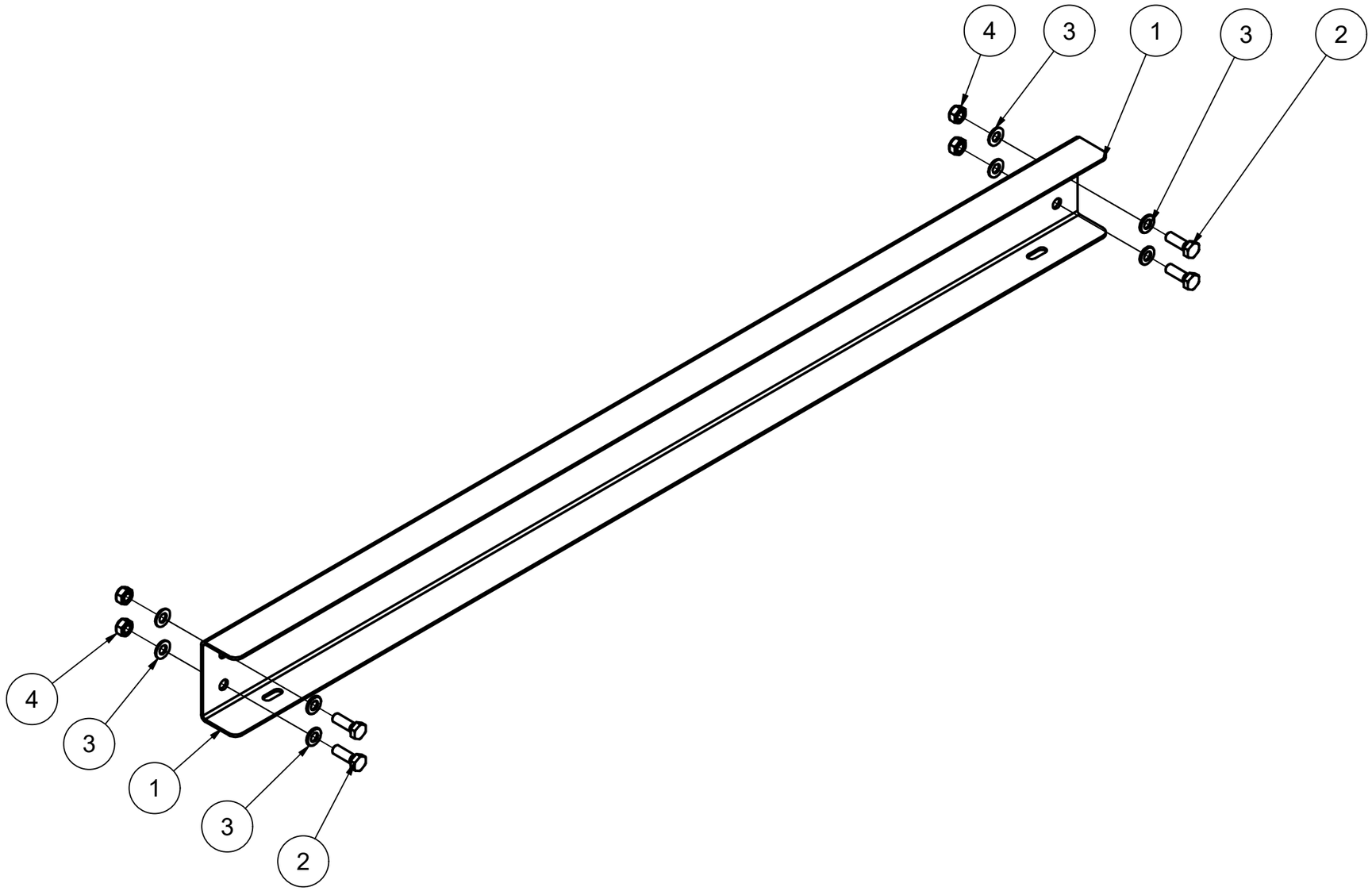

PARTLIST	
ITEM	Part Number
1	D858.L26.01
2	B100.A0681
3	B102.A0003
4	B101.A0026

[A] Critical part
[B] Preventive maintenance
[C] Wear parts
[D] useful to have on hand

GREMAC

version: 1.0 - 2022-08

D858.L38

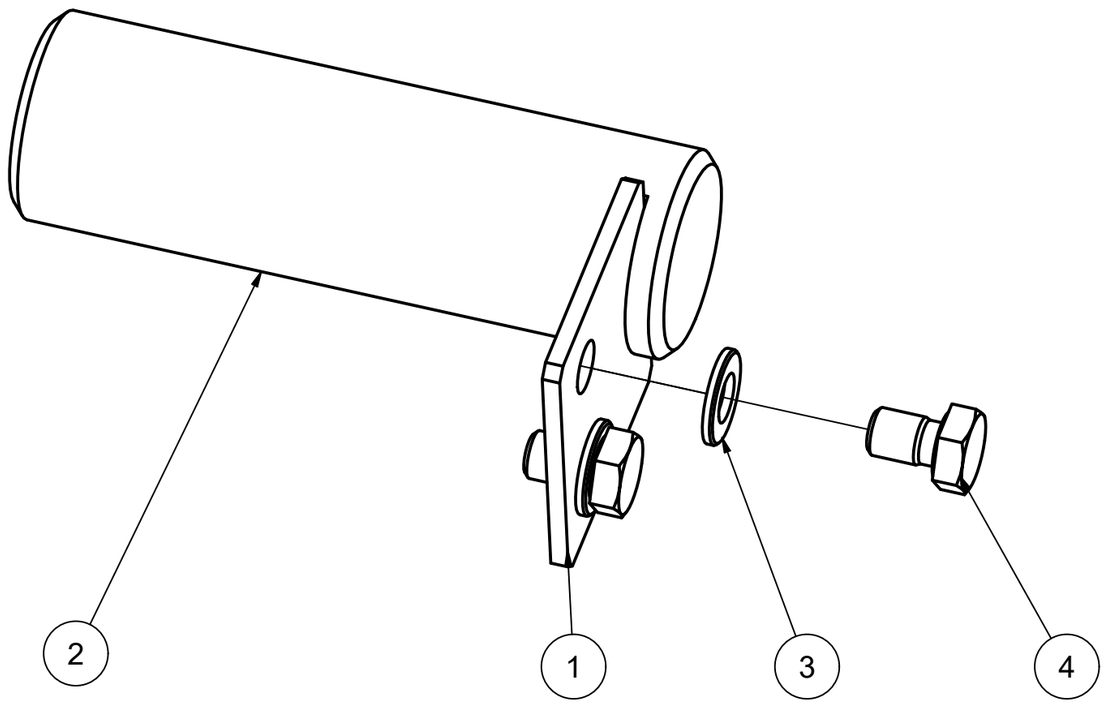

PARTLIST	
ITEM	Part Number
1	D858.L38.01
2	C000.M35.70
3	B102.A0002
4	B100.A0647

[A] Critical part
[B] Preventive maintenance
[C] Wear parts
[D] useful to have on hand

GREMAC

version: 1.0 - 2022-08

D860.D80

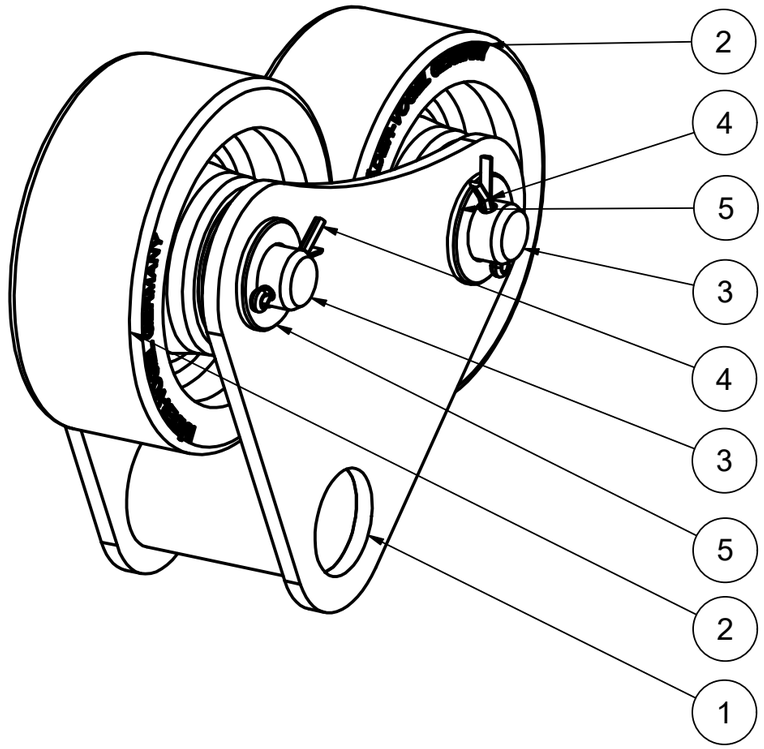

PARTLIST	
ITEM	Part Number
1	D860.D81
2	B117.A0040 [A, C]
3	C000.M20.56 [D]
4	B104.A0222
5	B102.A0008

[A] Critical part
[B] Preventive maintenance
[C] Wear parts
[D] useful to have on hand

GREMAC

version: 1.0 - 2022-08

D860.D20

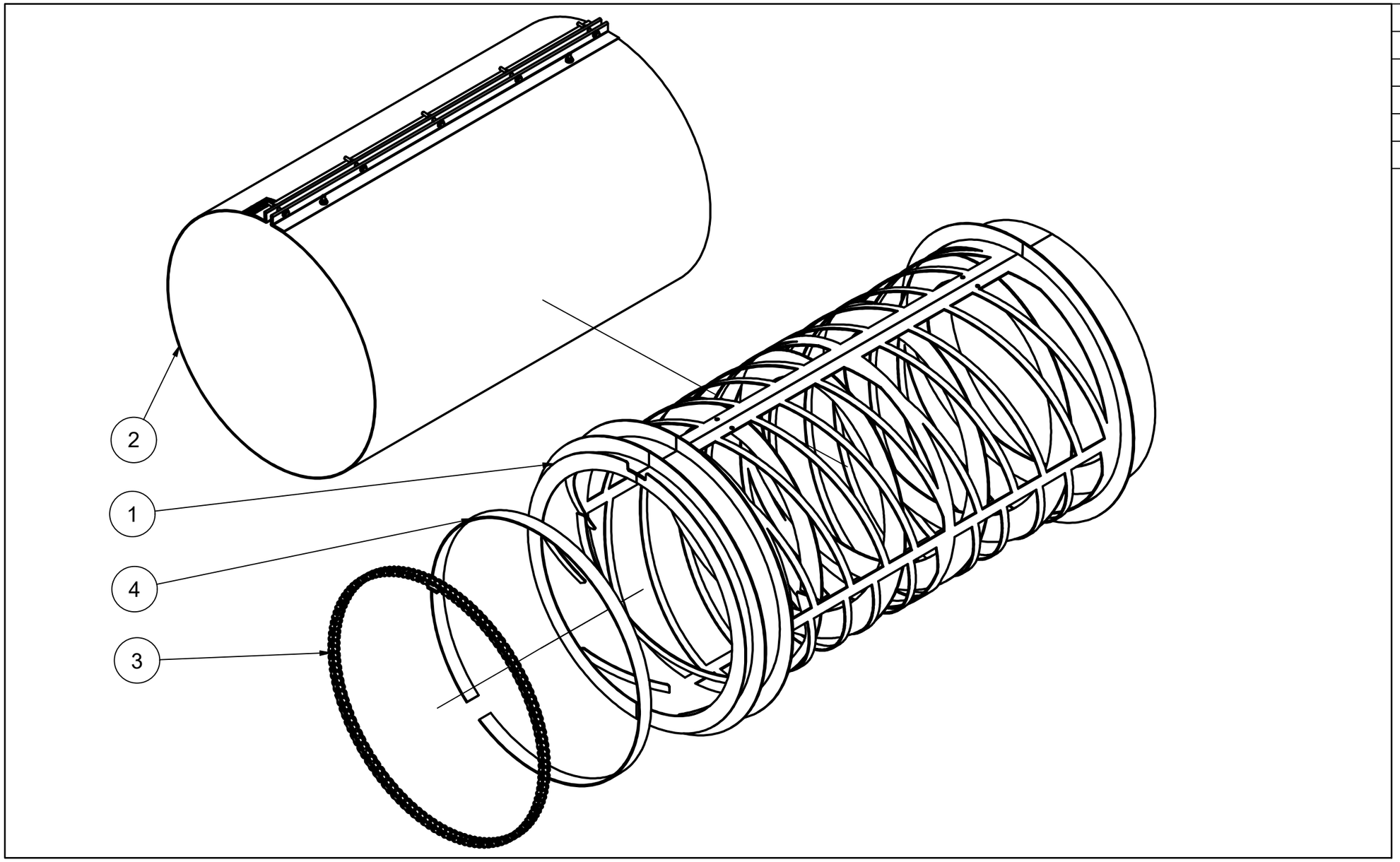

PARTLIST	
ITEM	Part Number
1	D860.D21 [C]
2	D858.D20 [C]
3	B507.A0073 [A, B, C]
4	D862.D20.01 [A, B, C]

[A] Critical part
[B] Preventive maintenance
[C] Wear parts
[D] useful to have on hand

GREMAC

version: 1.0 - 2022-08

D858.D20

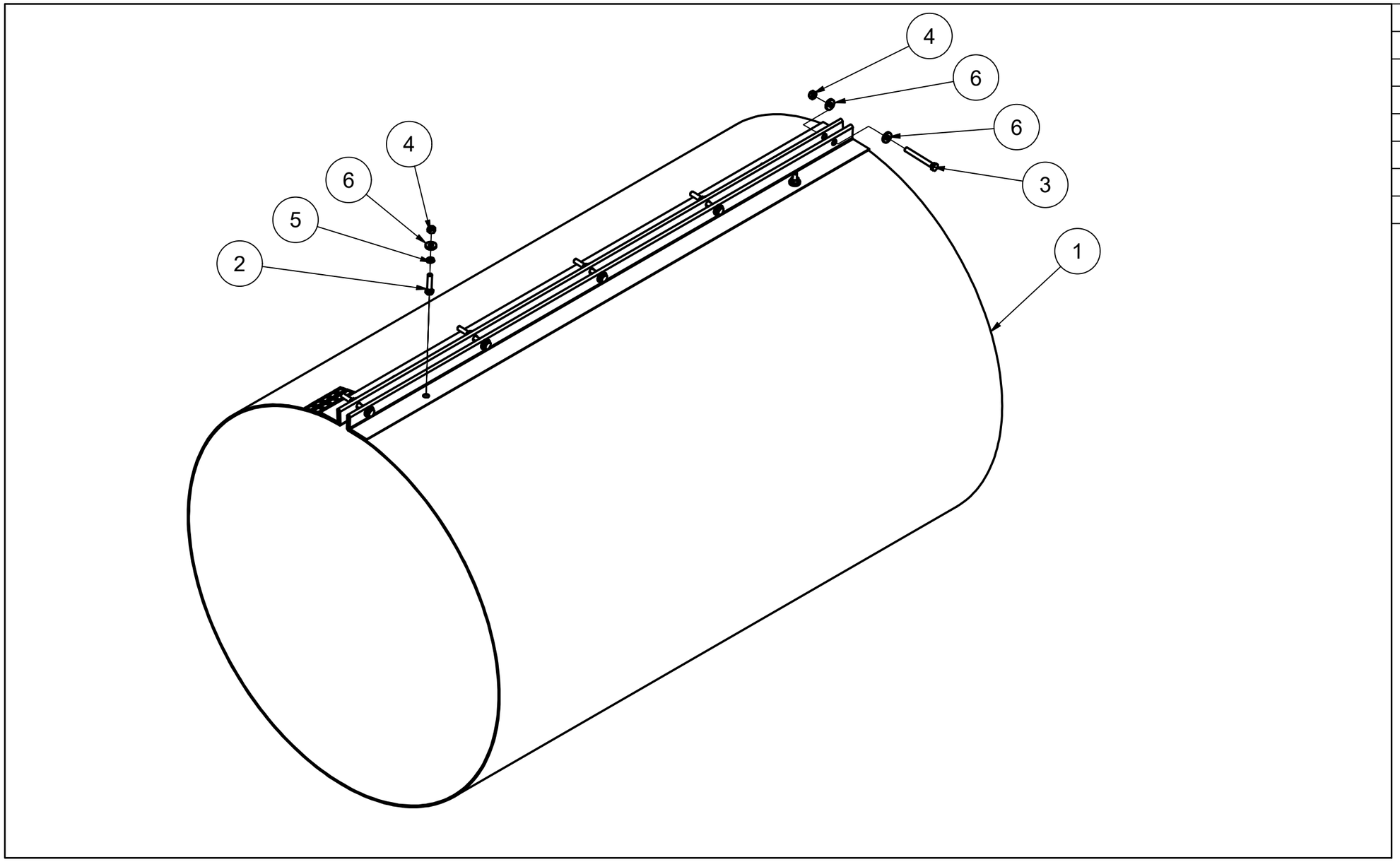

PARTLIST	
ITEM	Part Number
1	D858.D21
2	B100.A0684
3	B100.A0693
4	B101.A0026
5	B101.A9994
6	B102.A0023

[A] Critical part
[B] Preventive maintenance
[C] Wear parts
[D] useful to have on hand

GREMAC

version: 1.0 - 2022-08

D860.L41(A)

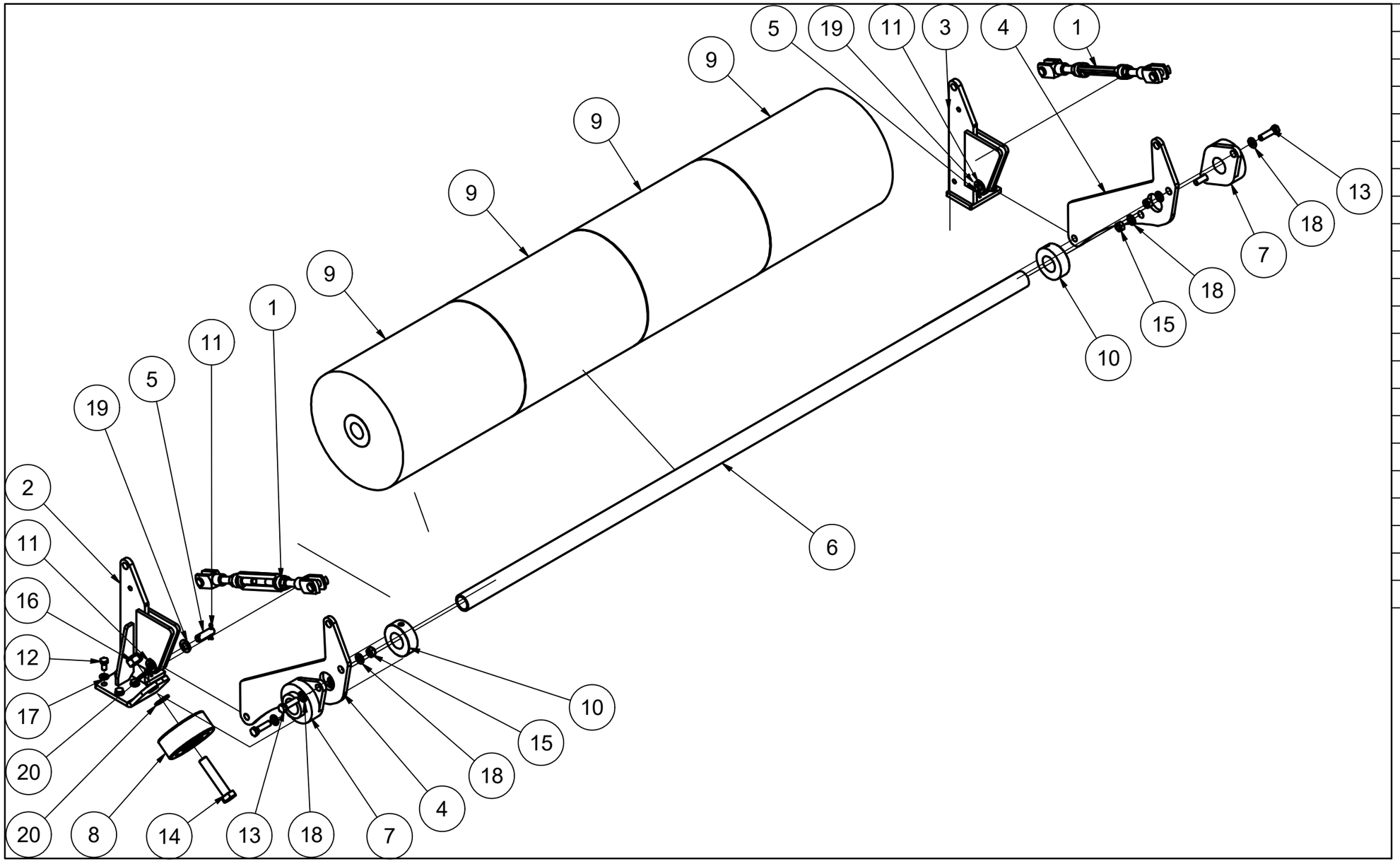

PARTLIST	
ITEM	Part Number
1	D860.L44
2	D860.L42
3	D860.L43
4	D860.L43.01
5	C000.M15.51
6	D860.L41.05
7	B108.A0078 [C]
8	B117.A0040
9	B600.A0122 [C]
10	B119.A0120
11	B104.A0222
12	B100.A0677
13	B100.A0714
14	B100.A1306
15	B101.A0027
16	B101.A0030
17	B102.A0003
18	B102.A0004
19	B102.A0012
20	B102.A0008

[A] Critical part
[B] Preventive maintenance
[C] Wear parts
[D] useful to have on hand

GREMAC

version: 1.0 - 2022-08

D860.L44

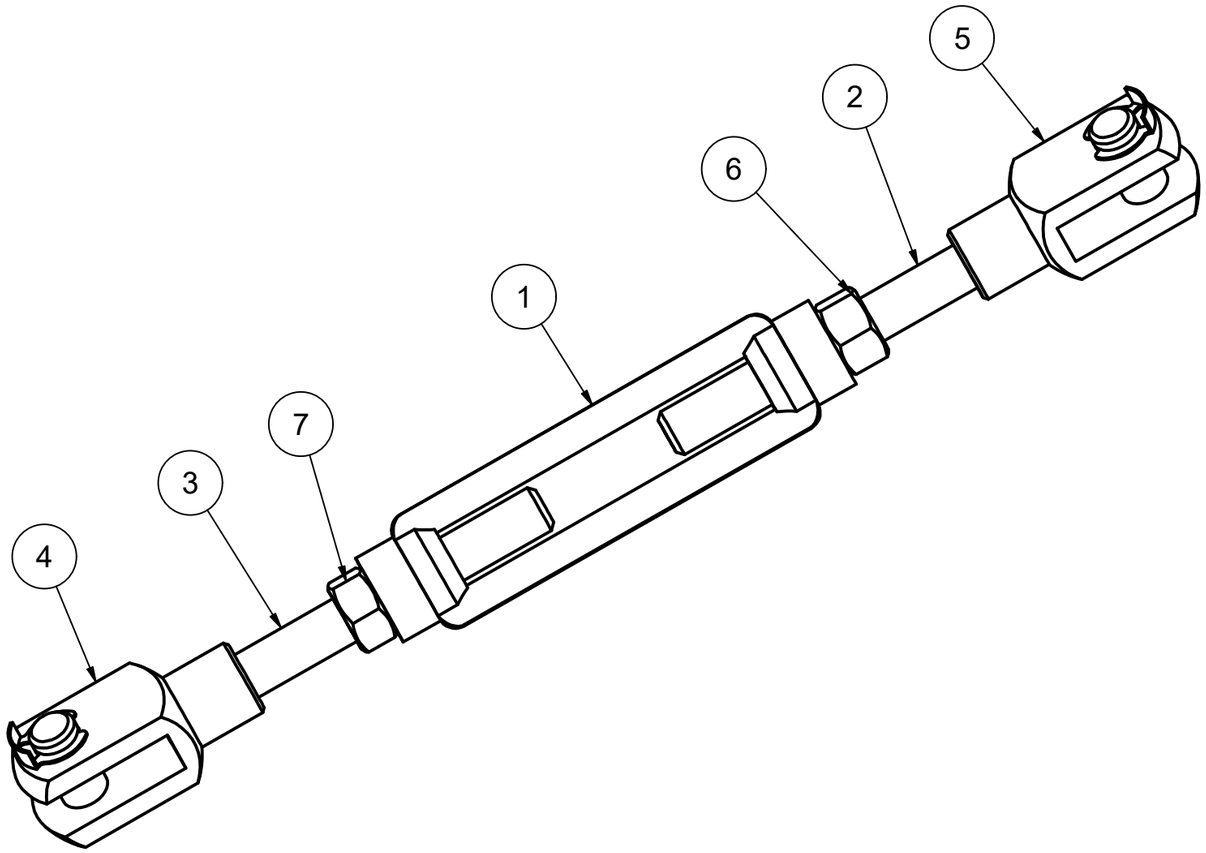

PARTLIST	
ITEM	Part Number
1	B101.A0076
2	D860.L44.01
3	D860.L44.02
4	B119.A0402
5	B119.A0403
6	B101.A0016
7	B101.A0072

[A] Critical part
[B] Preventive maintenance
[C] Wear parts
[D] useful to have on hand

GREMAC

version: 1.0 - 2022-08

D858.E07(C)

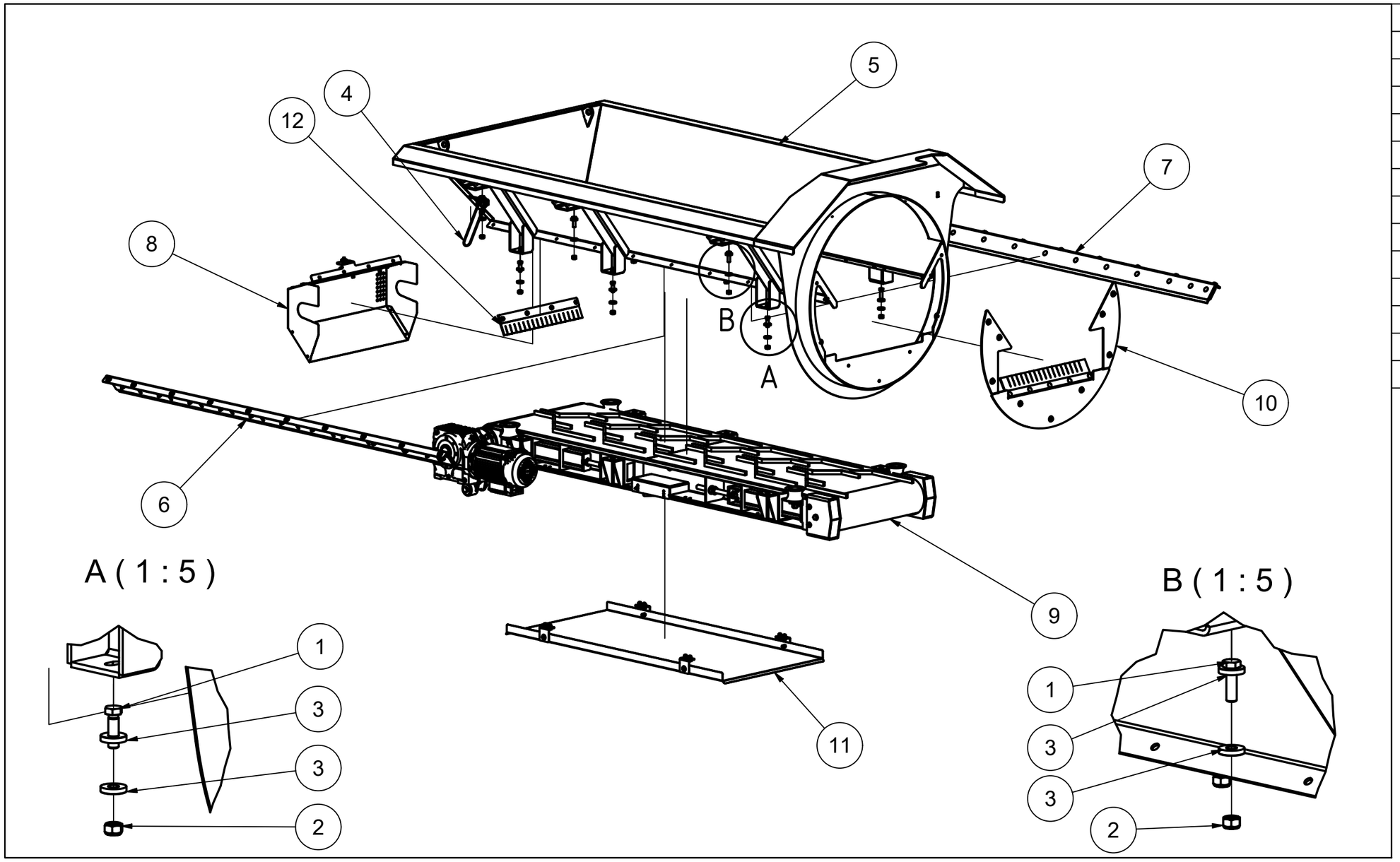

PARTLIST	
ITEM	Part Number
1	B100.A0713
2	B101.A0027
3	B102.A0034
4	B907.A9999
5	D858.E12(D)
6	D858.E33
7	D858.E34
8	D858.E45(B)
9	D858.F02(B)
10	D858.G04
11	D858.L60(A)
12	D858.M65

[A] Critical part
[B] Preventive maintenance
[C] Wear parts
[D] useful to have on hand

GREMAC

version: 1.0 - 2022-08

D858.F02(B)

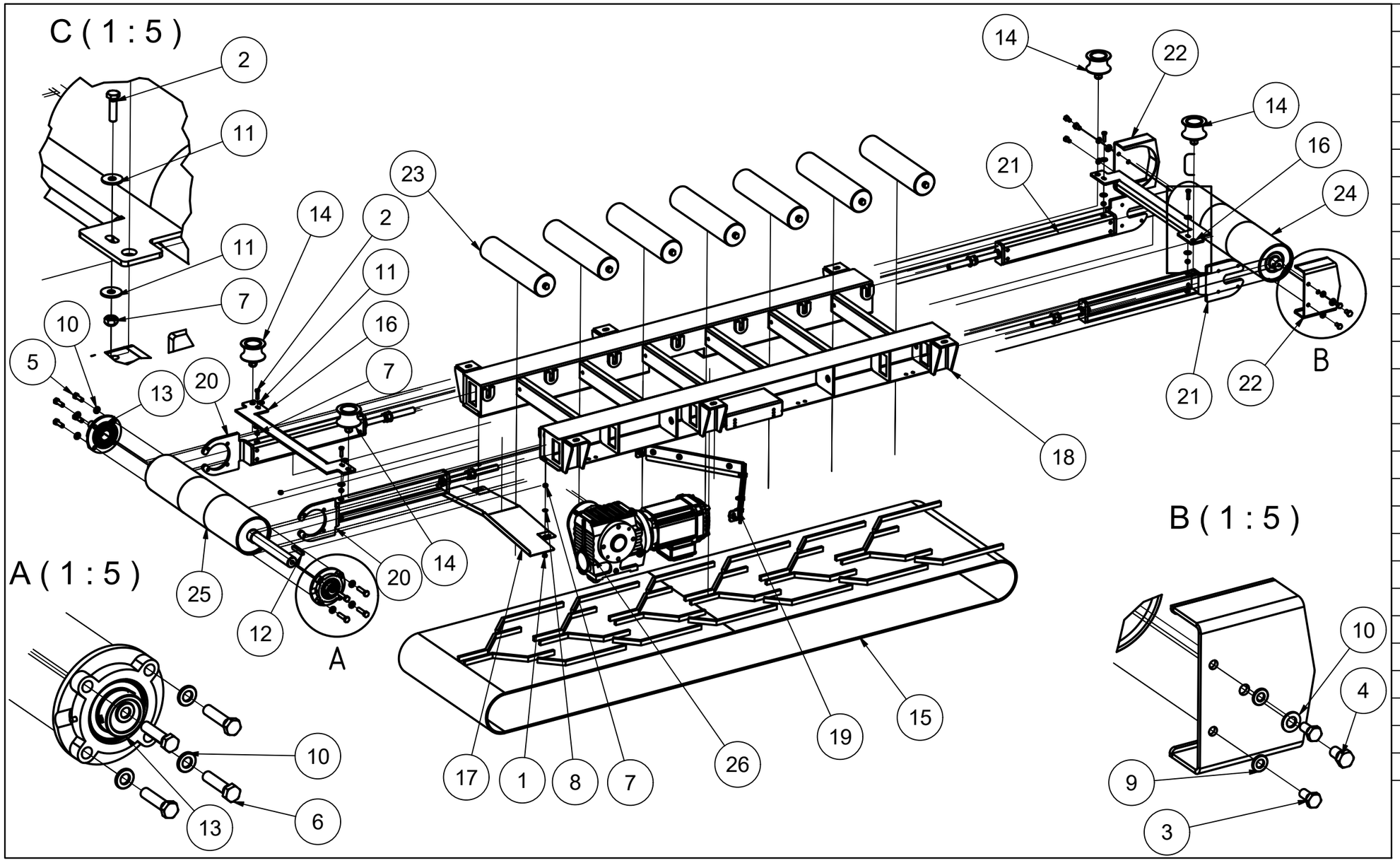

PARTLIST	
ITEM	Part Number
1	B100.A0651
2	B100.A0654
3	B100.A0677
4	B100.A0708
5	B100.A0713
6	B100.A0715
7	B101.A0025
8	B102.A0002
9	B102.A0003
10	B102.A0004
11	B102.A0028
12	B103.A0089
13	B108.A0076 [A, C]
14	B117.B12
15	B603.A0007 [D]
16	D858.F02.03
17	D858.F02.06
18	D858.F21(C)
19	D858.F25
20	D858.F83(A)
21	D858.F88(A)
22	D858.G03
23	D858.Q0002 [A, D]
24	D858.Q20(B)
25	D858.Q23(A)
26	D862.F21

[A] Critical part
[B] Preventive maintenance
[C] Wear parts
[D] useful to have on hand

GREMAC

version: 1.0 - 2022-08

D858.F25

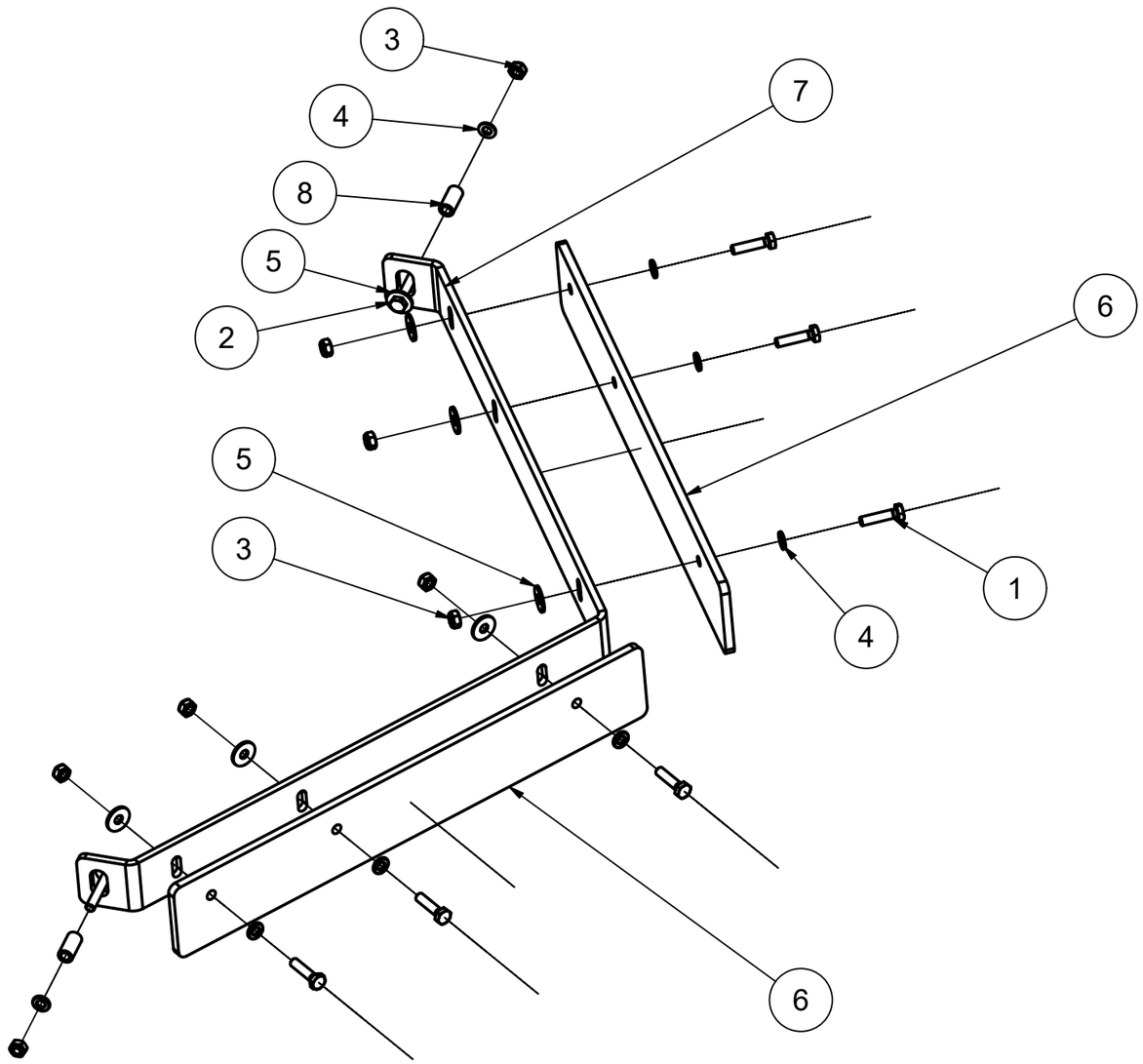

PARTLIST	
ITEM	Part Number
1	B100.A0627
2	B100.A0631
3	B101.A0024
4	B102.A0001
5	B102.A0027
6	D858.F25.04(A) [C]
7	D858.F25.06(A)
8	D860.F24.05

[A] Critical part
[B] Preventive maintenance
[C] Wear parts
[D] useful to have on hand

GREMAC

version: 1.0 - 2022-08

D858.F83(A)

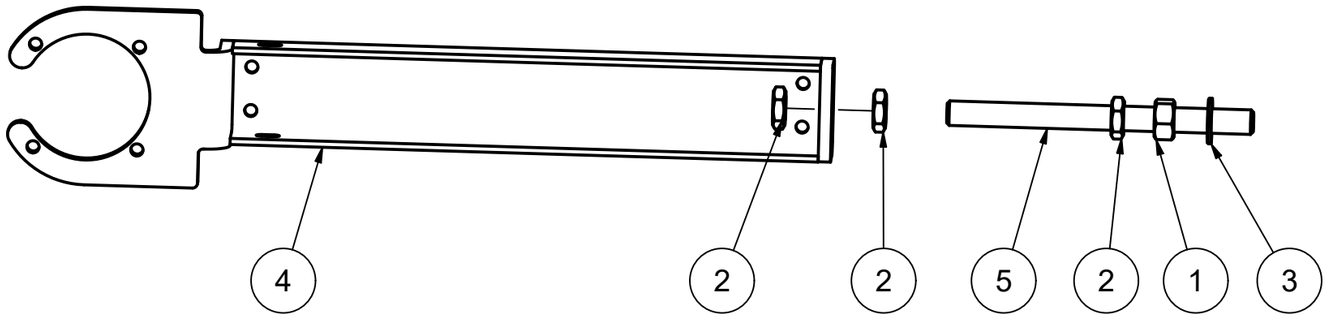

PARTLIST	
ITEM	Part Number
1	B101.A0017
2	B101.A0077
3	B102.A0008
4	D858.F81(A)
5	D860.F85.86 [D]

[A] Critical part
[B] Preventive maintenance
[C] Wear parts
[D] useful to have on hand

GREMAC

version: 1.0 - 2022-08

D858.F88(A)

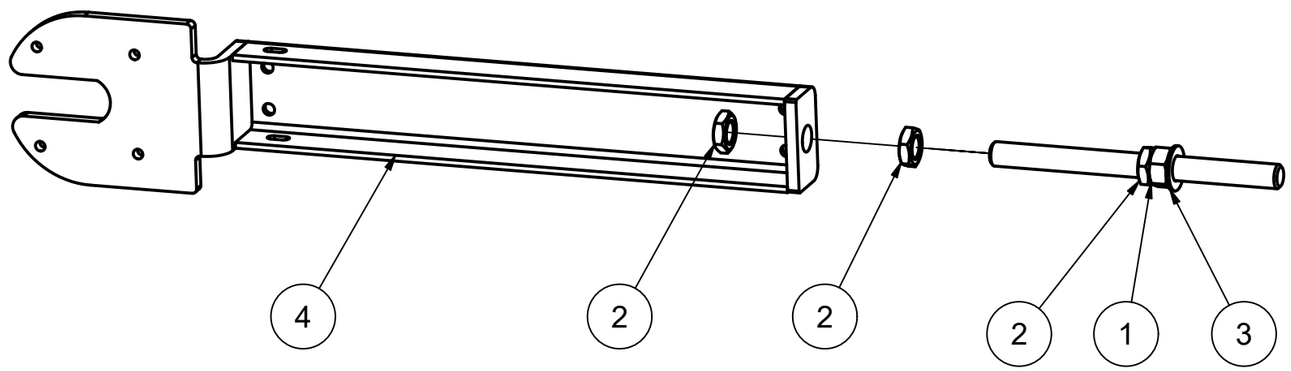

PARTLIST	
ITEM	Part Number
1	B101.A0017
2	B101.A0077
3	B102.A0008
4	D858.F87(A)
5	D860.F85.86

[A] Critical part
[B] Preventive maintenance
[C] Wear parts
[D] useful to have on hand

GREMAC

version: 1.0 - 2022-08

D858.G04

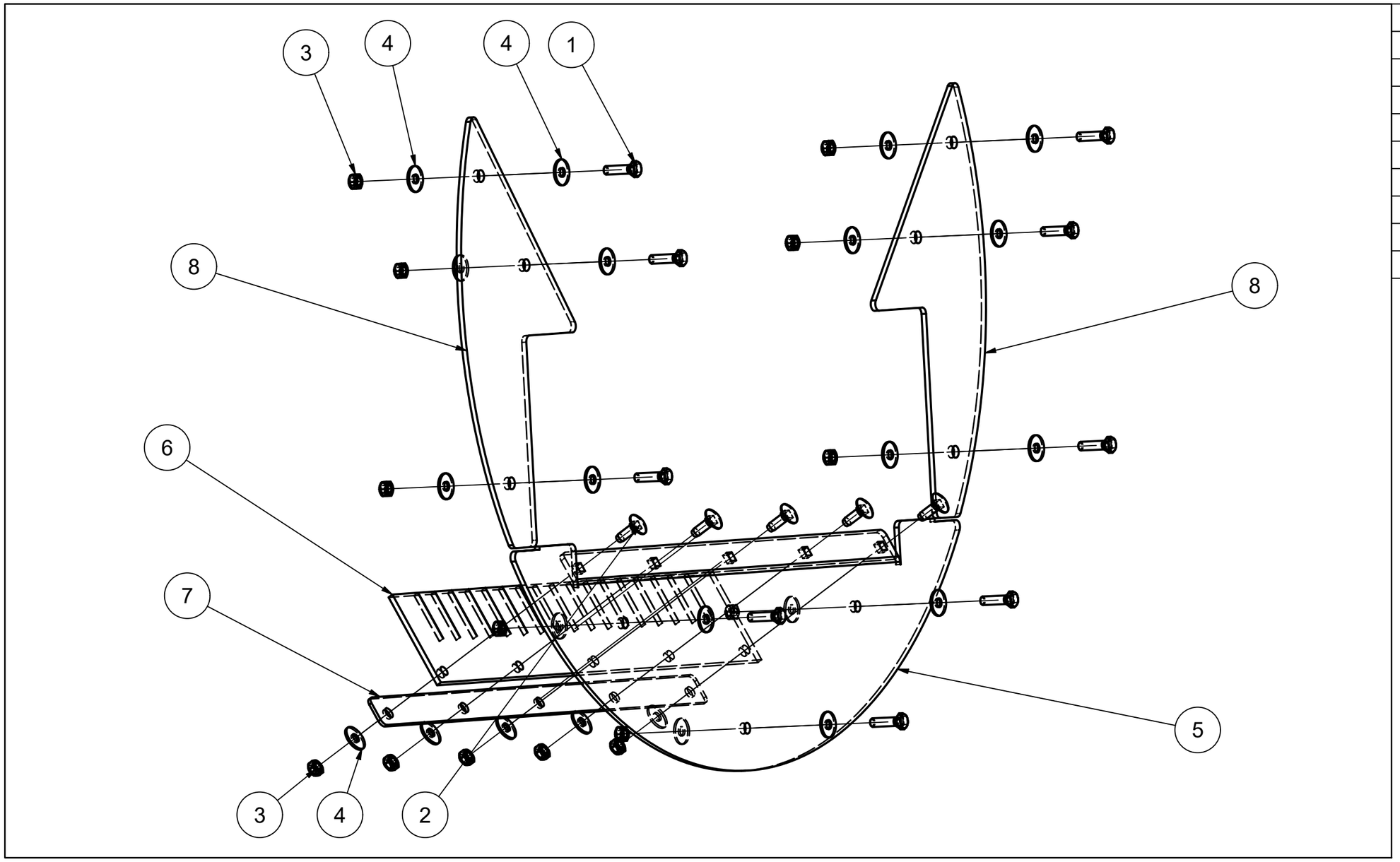

PARTLIST	
ITEM	Part Number
1	B100.A0654
2	B100.A1401
3	B101.A0025
4	B102.A0028
5	D858.G04.01(A)
6	D858.M65.03 [C, D]
7	D858.M65.04
8	D858.M66.01(B)

[A] Critical part
[B] Preventive maintenance
[C] Wear parts
[D] useful to have on hand

GREMAC

version: 1.0 - 2022-08

D858.E33

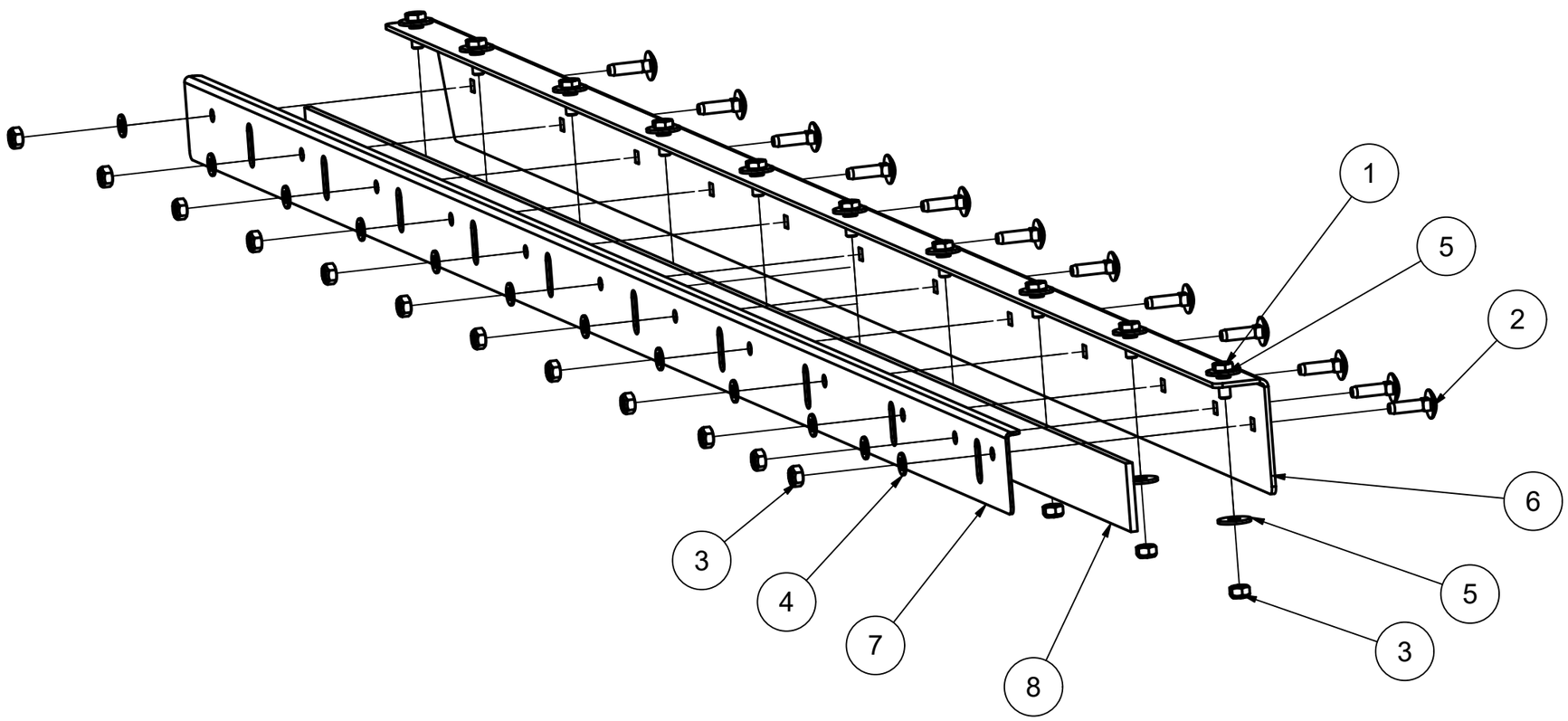

PARTLIST	
ITEM	Part Number
1	B100.A0651
2	B100.A9982
3	B101.A0025
4	B102.A0002
5	B102.A0028
6	D858.E33.01
7	D858.E33.02
8	D858.E33.03

[A] Critical part
[B] Preventive maintenance
[C] Wear parts
[D] useful to have on hand

GREMAC

version: 1.0 - 2022-08

D858.E34

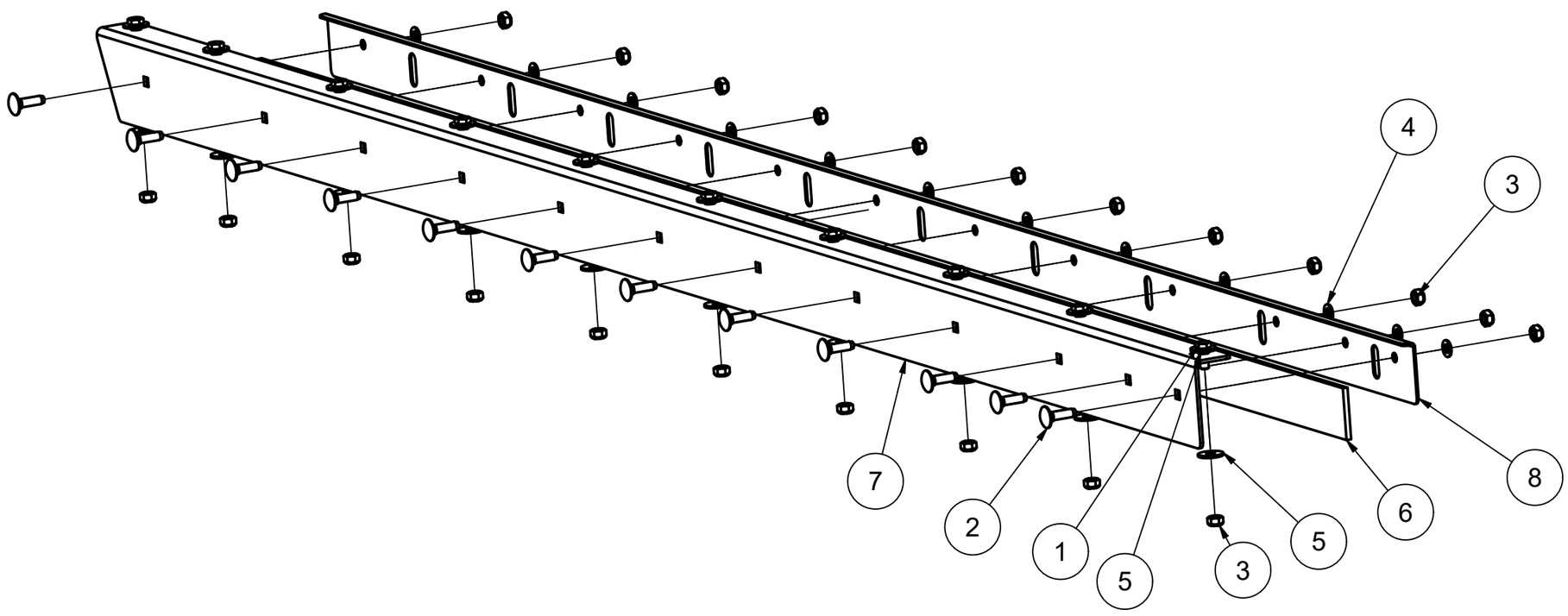

PARTLIST	
ITEM	Part Number
1	B100.A0651
2	B100.A9982
3	B101.A0025
4	B102.A0002
5	B102.A0028
6	D858.E33.03
7	D858.E34.01
8	D858.E34.02

[A] Critical part
[B] Preventive maintenance
[C] Wear parts
[D] useful to have on hand

GREMAC

version: 1.0 - 2022-08

D858.E45(B)

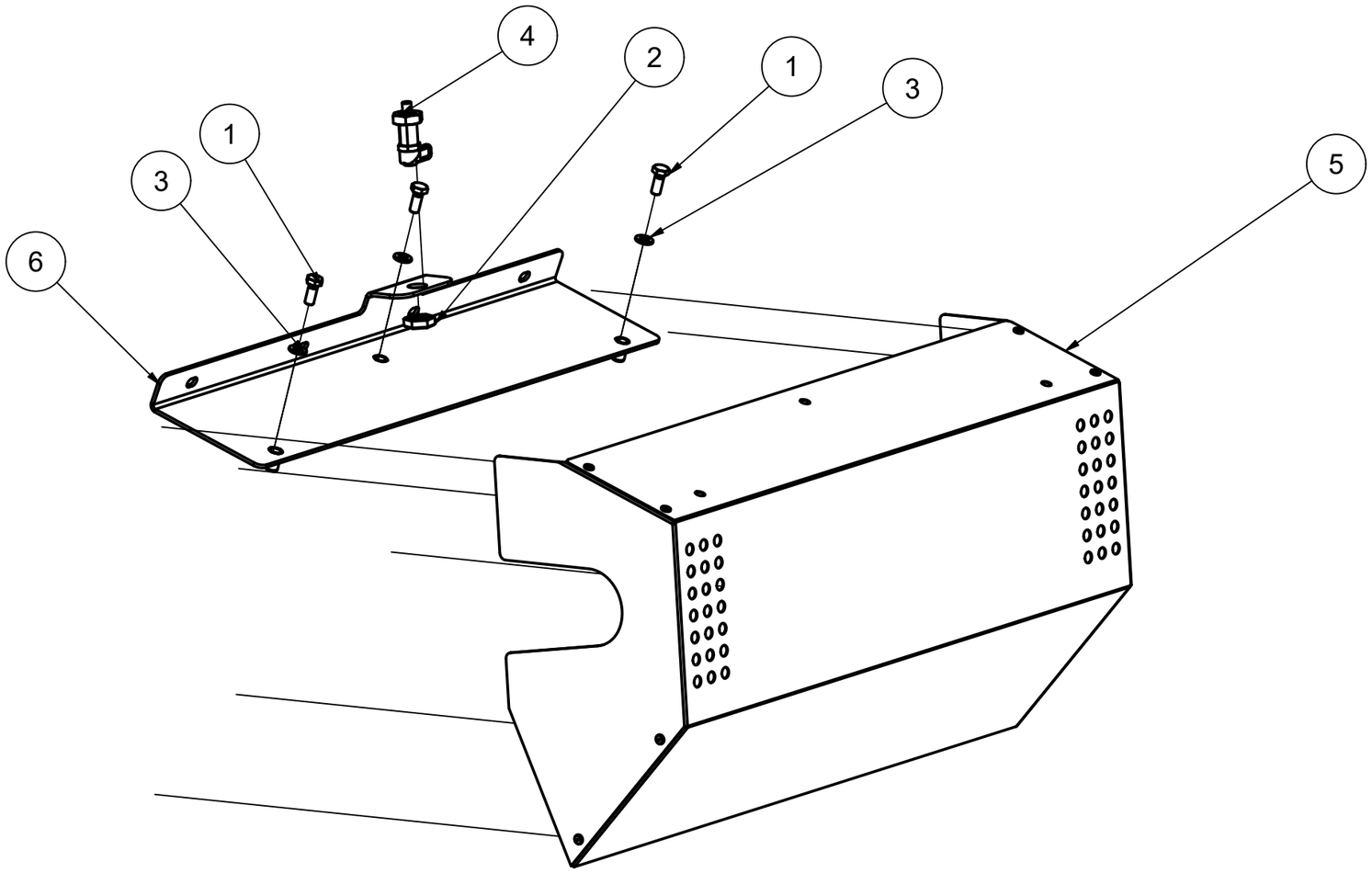

PARTLIST	
ITEM	Part Number
1	B100.A0651
2	B101.A0101
3	B102.A0002
4	B119.A0311
5	D858.E45.01(A)
6	D858.E45.02(A)

[A] Critical part
[B] Preventive maintenance
[C] Wear parts
[D] useful to have on hand

GREMAC

version: 1.0 - 2022-08

D858.L60(A)

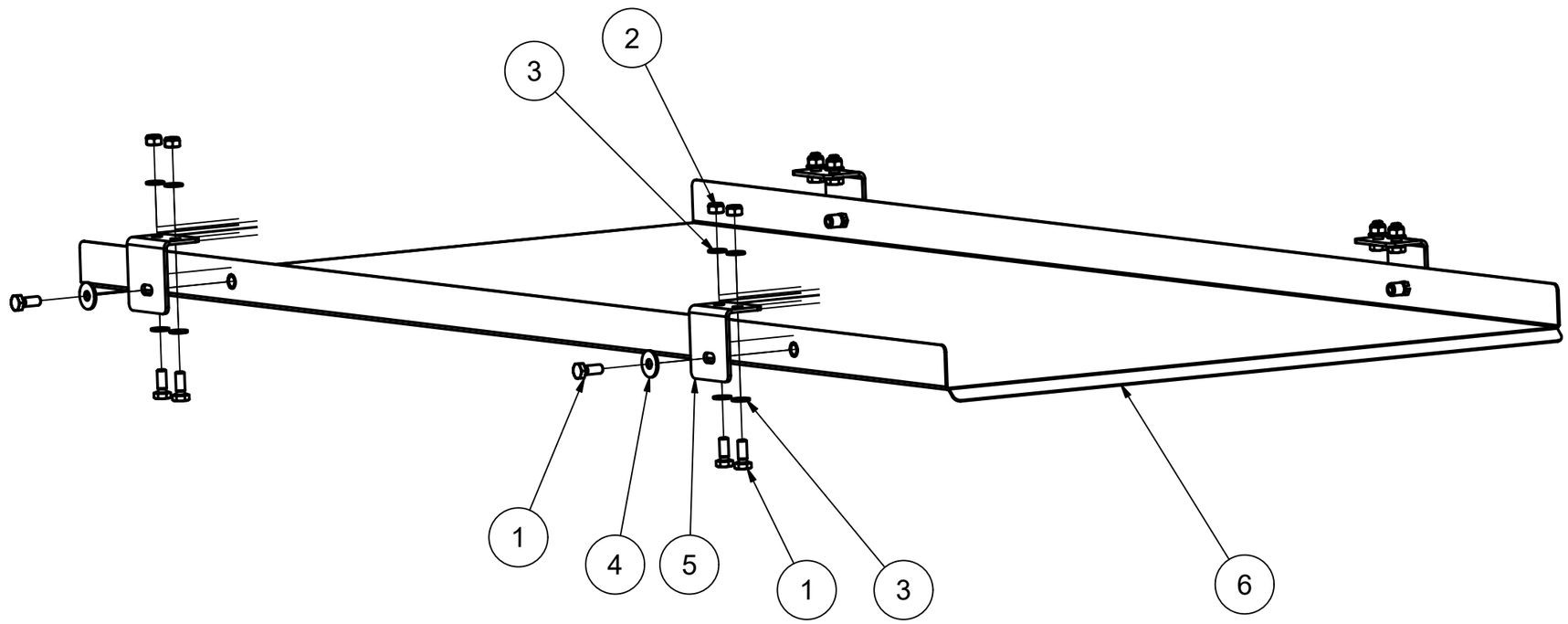

PARTLIST	
ITEM	Part Number
1	B100.A0651
2	B101.A0025
3	B102.A0002
4	B102.A0028
5	D858.L60.01(A)
6	D858.L60.02(A)

[A] Critical part
[B] Preventive maintenance
[C] Wear parts
[D] useful to have on hand

GREMAC

version: 1.0 - 2022-08

D858.M65

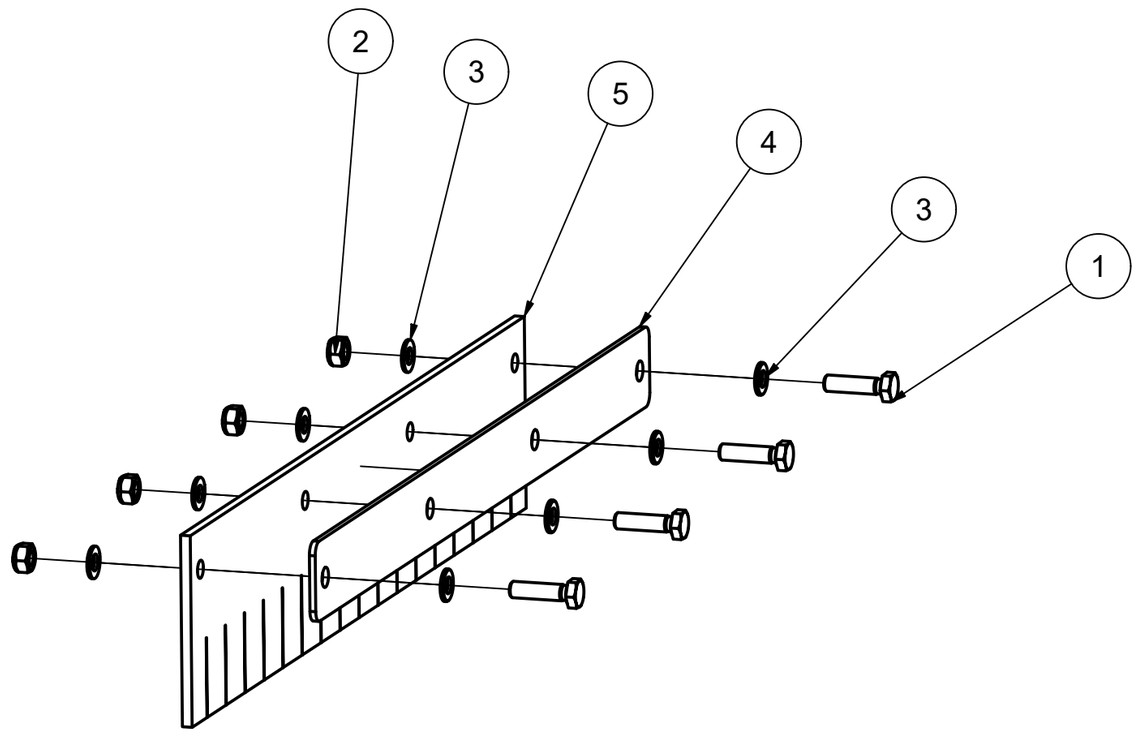

PARTLIST	
ITEM	Part Number
1	B100.A0654
2	B101.A0025
3	B102.A0002
4	D858.M65.01
5	D858.M65.02 [C, D]

[A] Critical part
[B] Preventive maintenance
[C] Wear parts
[D] useful to have on hand

GREMAC

version: 1.0 - 2022-08

D856.L06

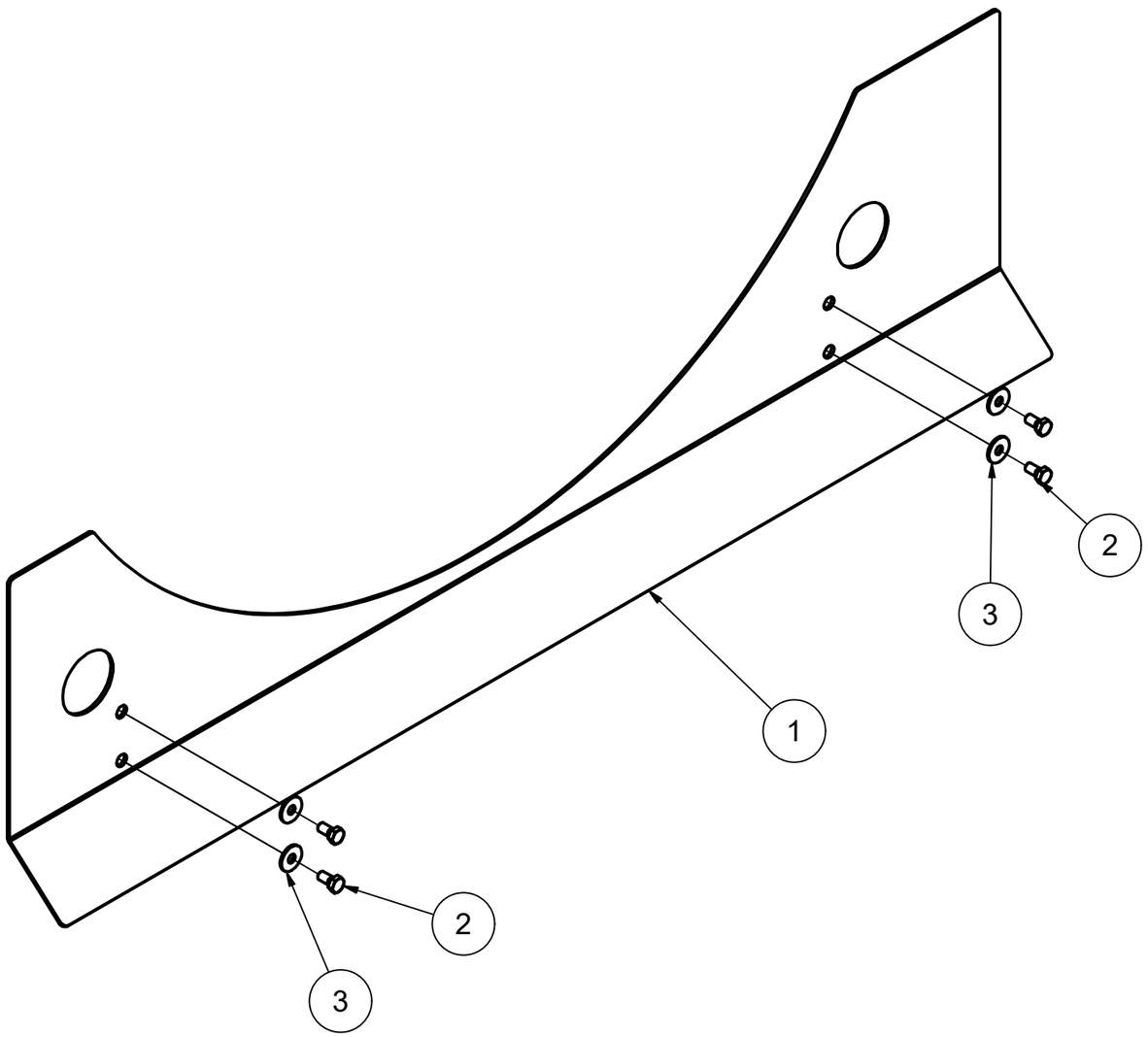

PARTLIST	
ITEM	Part Number
1	D856.L05.11
2	B100.A0649
3	B102.A0028

[A] Critical part
[B] Preventive maintenance
[C] Wear parts
[D] useful to have on hand

GREMAC

version: 1.0 - 2022-08

D856.L08

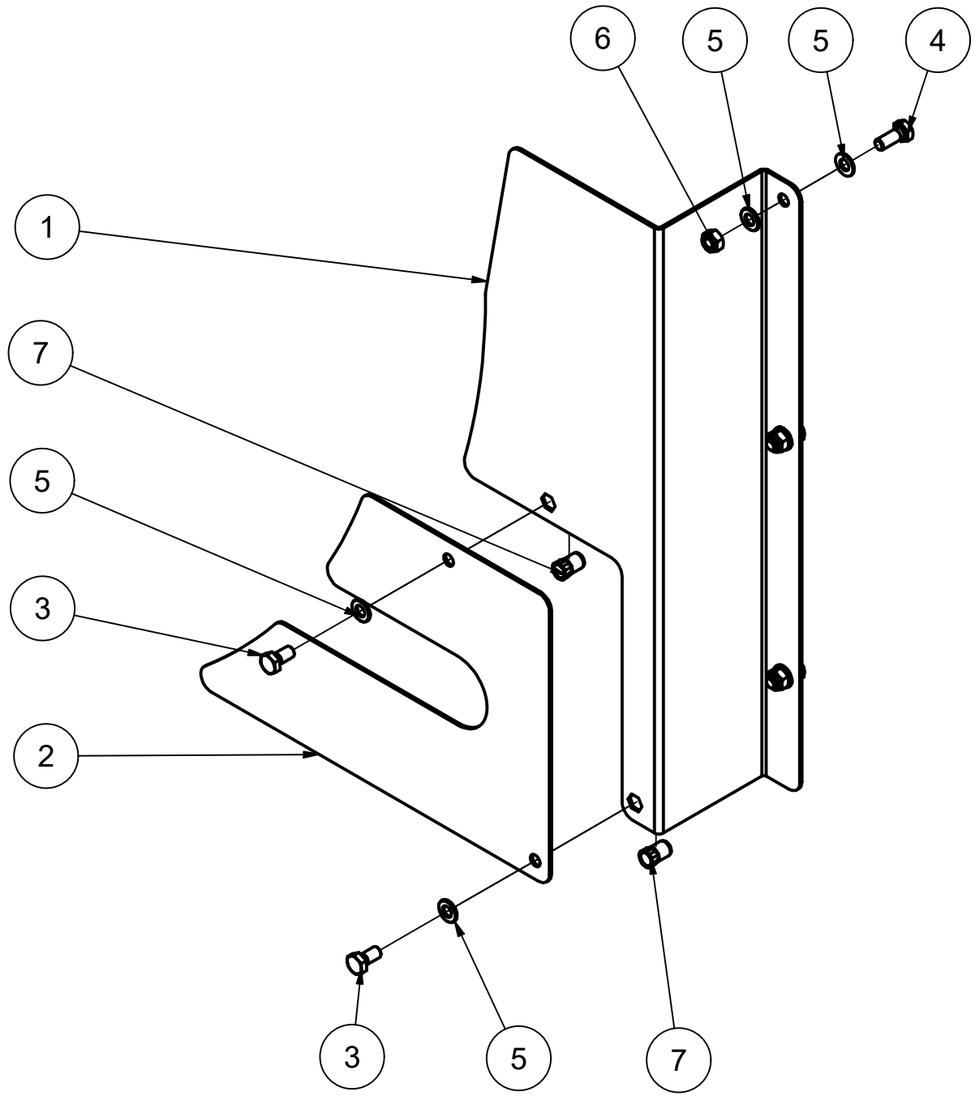

PARTLIST	
ITEM	Part Number
1	D856.L08.01
2	D858.M08.04
3	B100.A0649
4	B100.A0651
5	B102.A0002
6	B101.A0025
7	B106.A0011

[A] Critical part
[B] Preventive maintenance
[C] Wear parts
[D] useful to have on hand

GREMAC

version: 1.0 - 2022-08

D856.L10

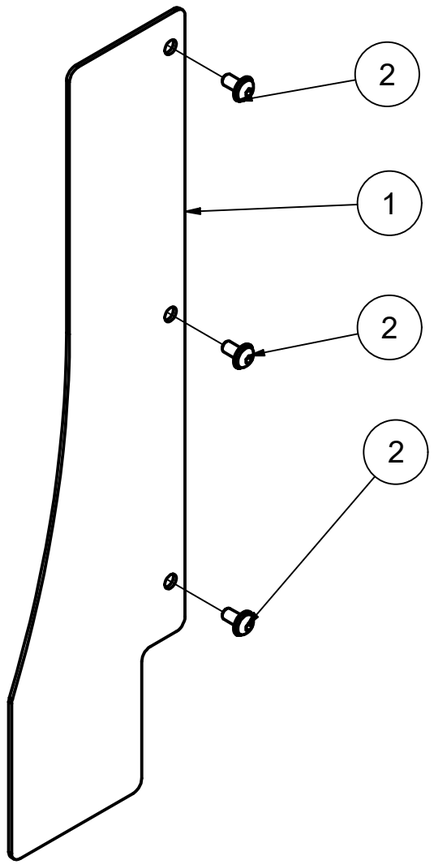

PARTLIST	
ITEM	Part Number
1	D856.L05.03
2	B100.A0960

[A] Critical part
[B] Preventive maintenance
[C] Wear parts
[D] useful to have on hand

GREMAC

version: 1.0 - 2022-08

D856.L15

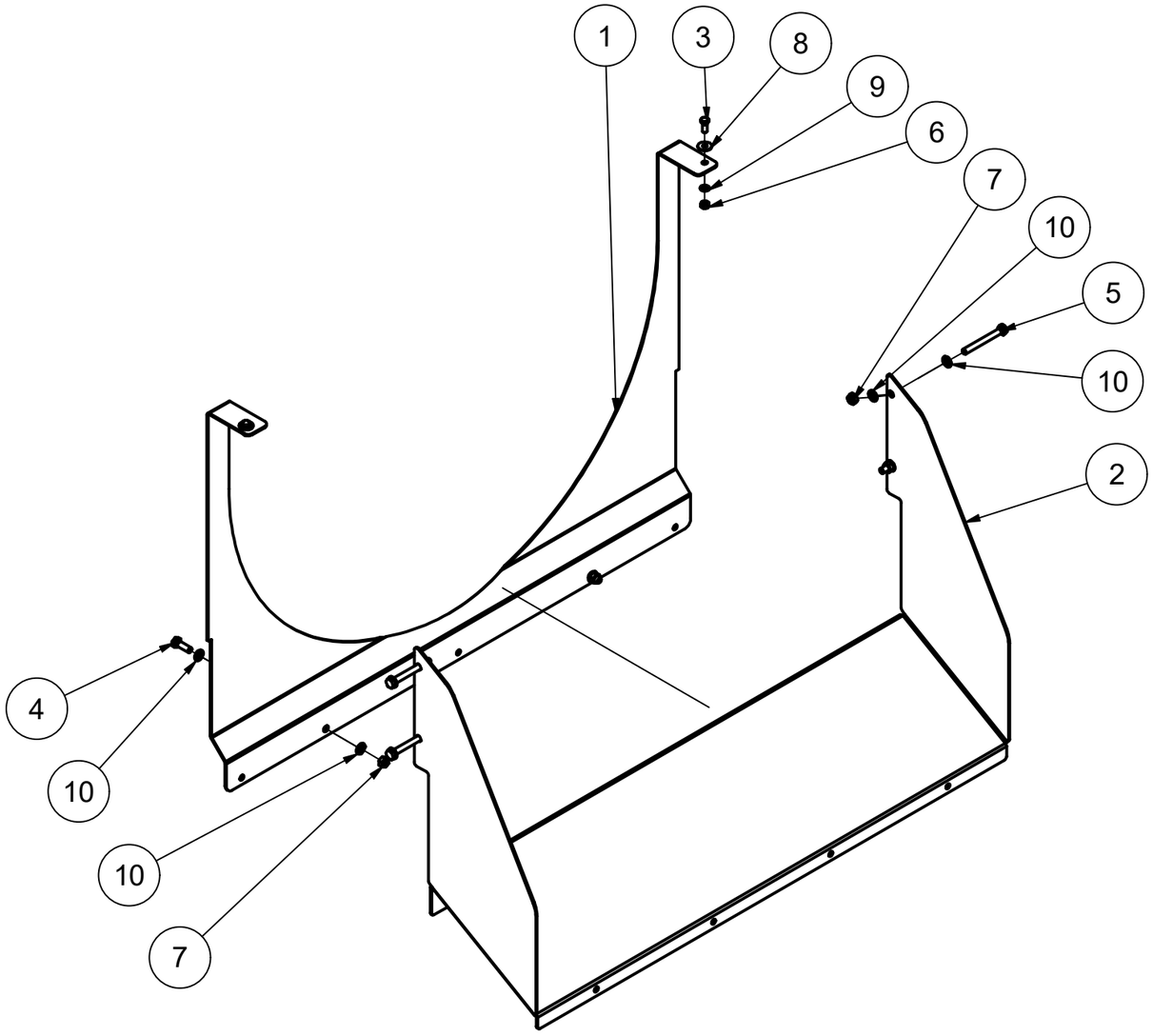

PARTLIST	
ITEM	Part Number
1	D858.L27.01
2	D858.L65.01
3	B100.A0651
4	B100.A0681
5	B100.A0693
6	B101.A0025
7	B101.A0026
8	B102.A0028
9	B102.A0002
10	B102.A0003

[A] Critical part
[B] Preventive maintenance
[C] Wear parts
[D] useful to have on hand

GREMAC

version: 1.0 - 2022-08

D856.L22

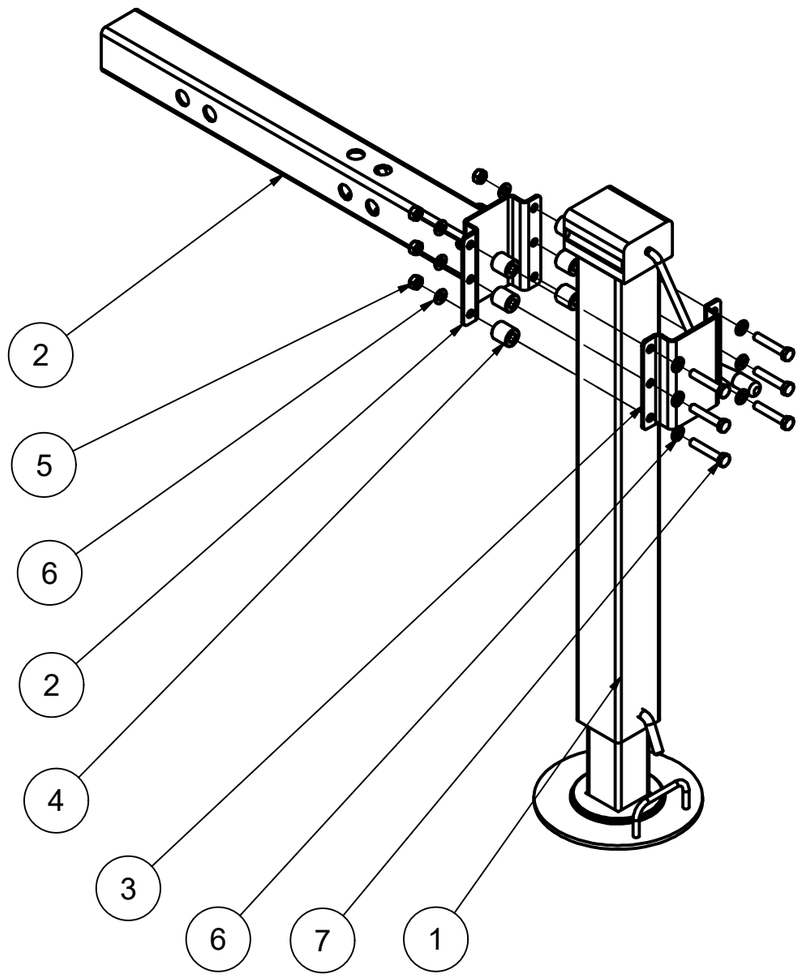

PARTLIST	
ITEM	Part Number
1	B907.A9990 [D]
2	D856.L23
3	D856.L13.01
4	D856.L22.01
5	B101.A0026
6	B102.A0003
7	B100.A0074

[A] Critical part
[B] Preventive maintenance
[C] Wear parts
[D] useful to have on hand

GREMAC

version: 1.0 - 2022-08

D858.L51

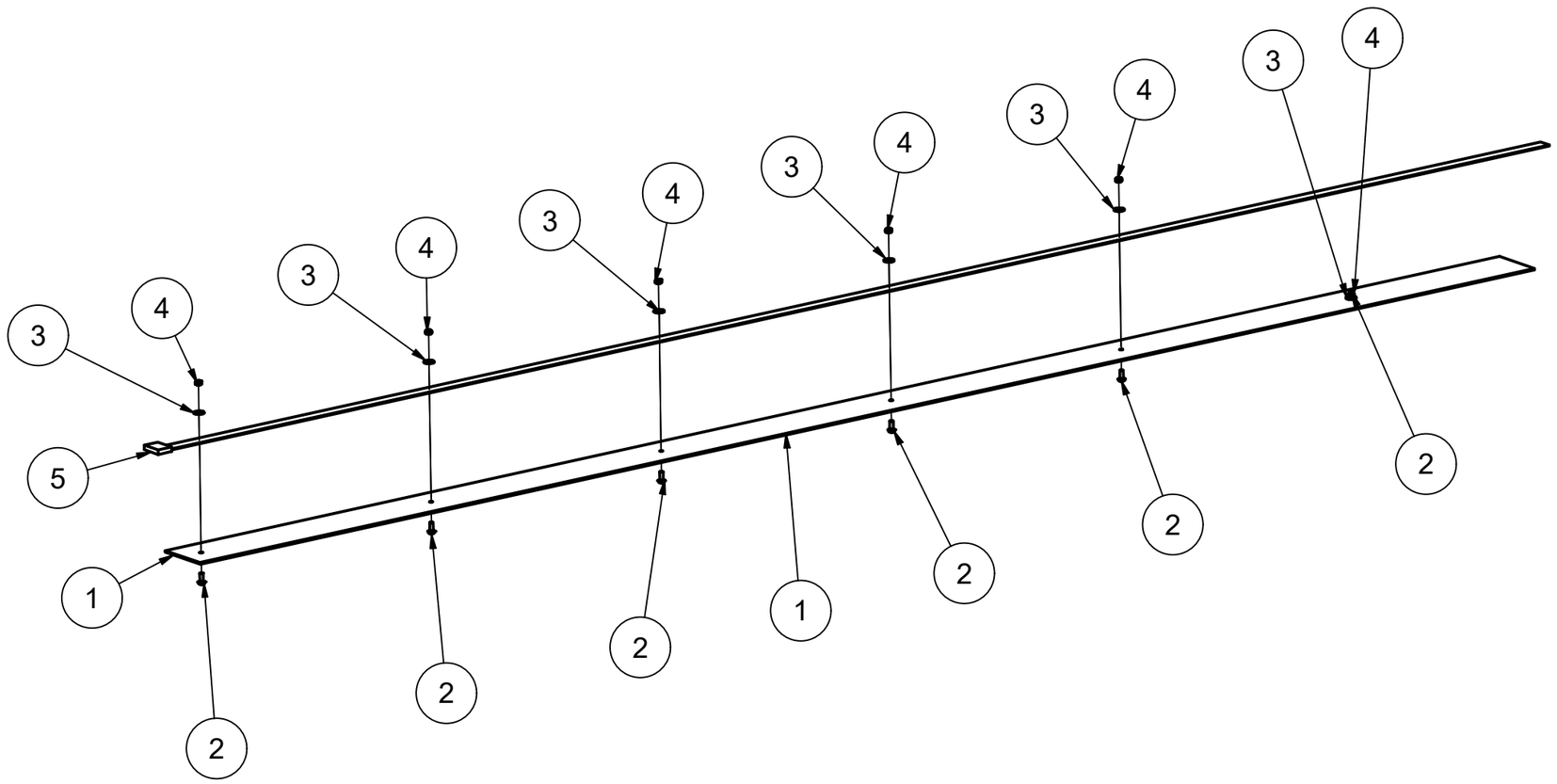

PARTLIST	
ITEM	Part Number
1	D858.A10.01
2	B100.A0961
3	B102.A0027
4	B101.A0024
5	B600.A9999

[A] Critical part
[B] Preventive maintenance
[C] Wear parts
[D] useful to have on hand

GREMAC

version: 1.0 - 2022-08

D856.G86

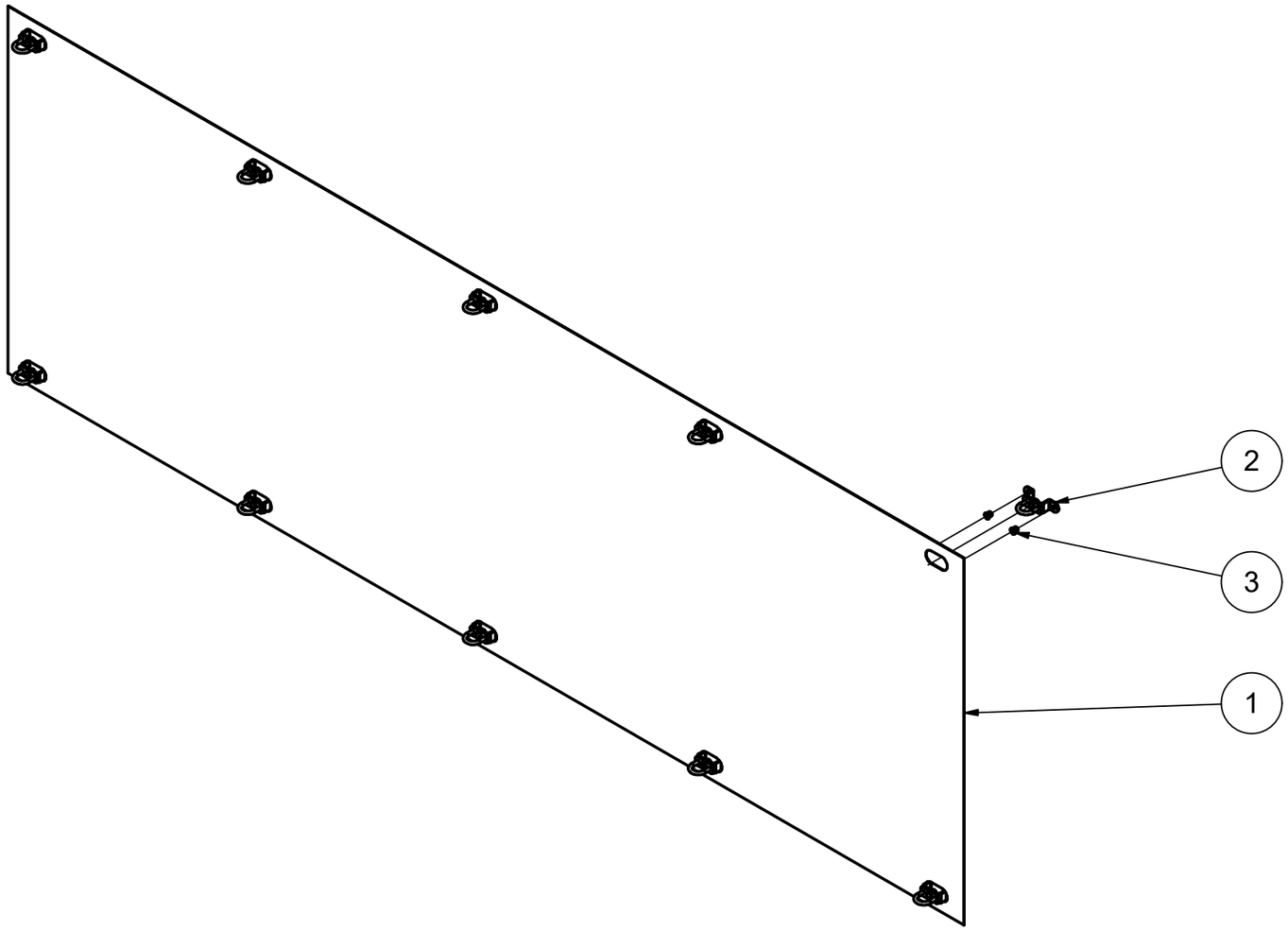

PARTLIST	
ITEM	Part Number
1	D856.G86.01 [D]
2	B119.A0070
3	B106.A0001

[A] Critical part
[B] Preventive maintenance
[C] Wear parts
[D] useful to have on hand

GREMAC

version: 1.0 - 2022-08

D858.M05

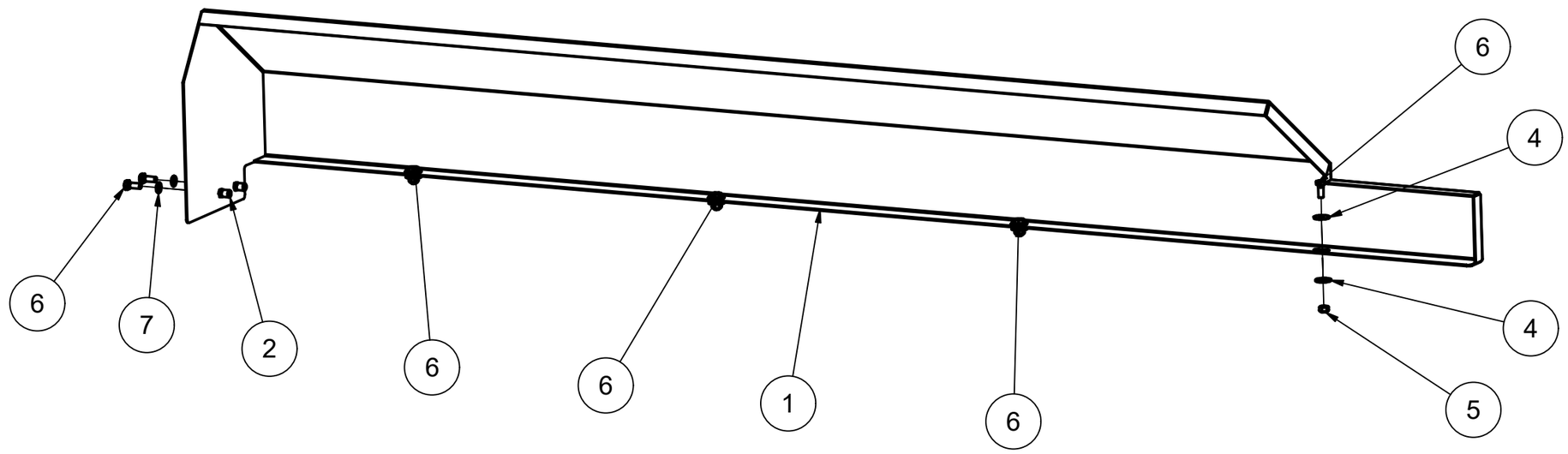

PARTLIST	
ITEM	Part Number
1	D858.M05.01
2	B106.A0011
4	B102.A0028
5	B101.A0025
6	B100.A0651
7	B102.A0002

[A] Critical part
[B] Preventive maintenance
[C] Wear parts
[D] useful to have on hand

GREMAC

version: 1.0 - 2022-08

D858.M09

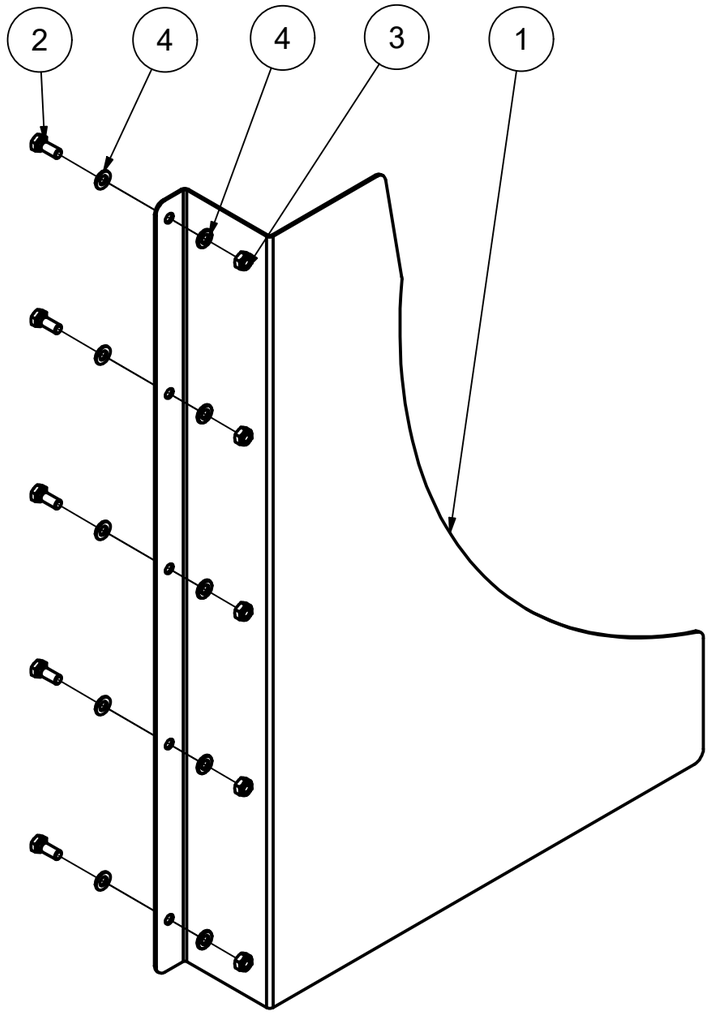

PARTLIST	
ITEM	Part Number
1	D858.M09.01
2	B100.A0651
3	B101.A0025
4	B102.A0002

[A] Critical part
[B] Preventive maintenance
[C] Wear parts
[D] useful to have on hand

GREMAC

version: 1.0 - 2022-08

D860.M06

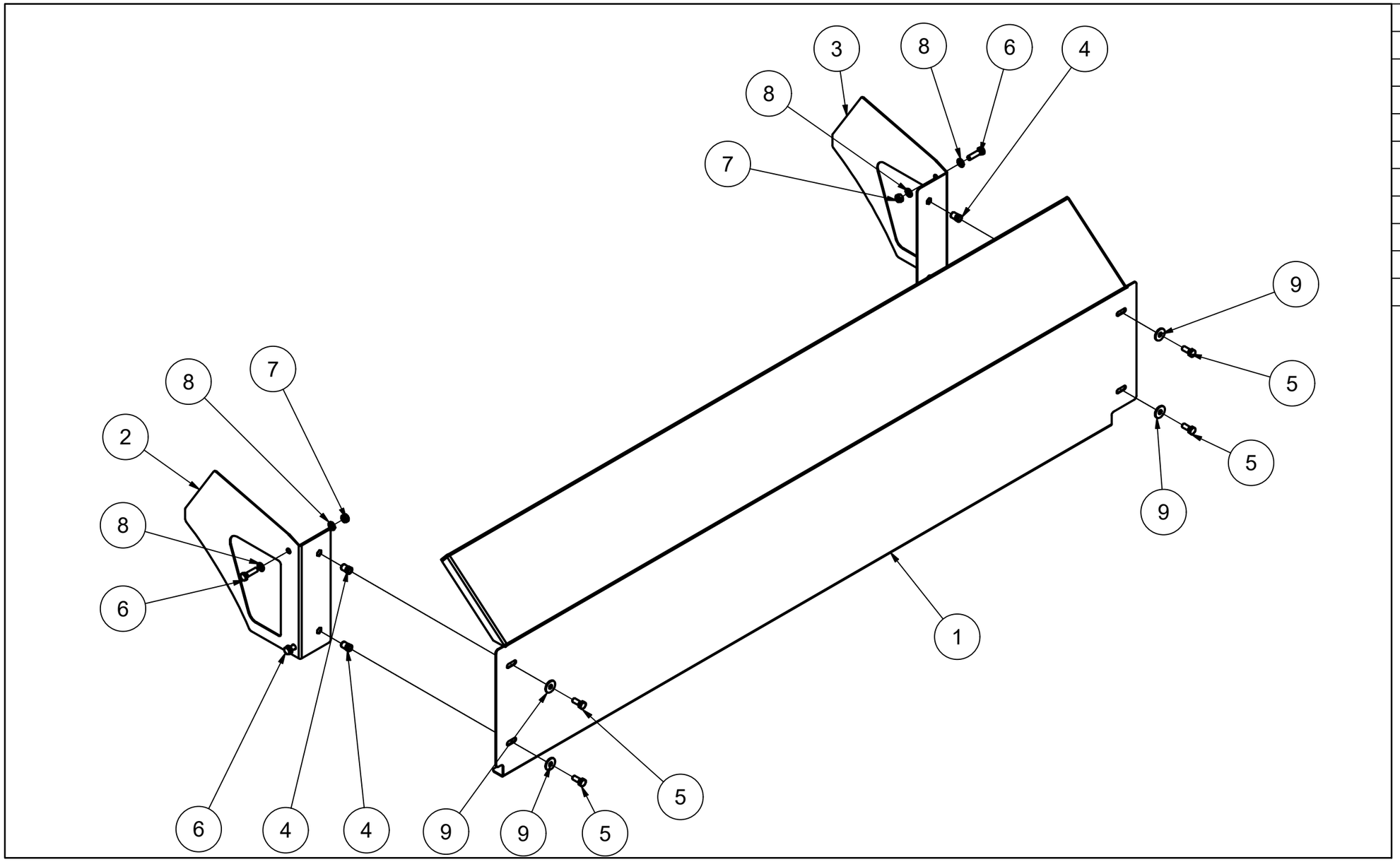

PARTLIST	
ITEM	Part Number
1	D860.M06.01
2	D860.M06.02(B)
3	D860.M06.03(B)
4	B106.A0011
5	B100.A0651
6	B100.A0654
7	B101.A0025
8	B102.A0002
9	B102.A0028

[A] Critical part
[B] Preventive maintenance
[C] Wear parts
[D] useful to have on hand

How to reach us

Production & Service	Gremac Maschinenbau GmbH & Co KG Hansbaur-Weg 7 D-8944 Medlingen www.gremac.de
Service call	Phone/Whatsapp: +49 (0) 90 73 - 40 39 87 0
Service email	service@h2protech.de
Sales	GREMAC OHG Fritz-Reuter-Straße 12 26203 Wardenburg Phone: +49 (0) 44 07 - 3 28 20 44 Web. www.gremac.de Email: einfachsieben@gremac.de

l rights reserved. No part of this paper may be reproduced in any way (printing, photocopying, microfilm, or other method) or processed, transmitted, reproduced or published by electronic means without the prior permission of H2PRO. These documents have been prepared and checked with the utmost care. However, the possibility of error cannot be completely excluded. The publisher and author cannot assume any legal responsibility or liability for erroneous information or its consequences.

GREMAC